TSC-9902 User Guide

www.rossvideo.com

ROSS

Thank You for Choosing Ross

You've made a great choice. We expect you will be very happy with your purchase of Ross Technology.

Our mission is to:

1. Provide a Superior Customer Experience
   - offer the best product quality and support
2. Make Cool Practical Technology
   - develop great products that customers love

Ross has become well known for the Ross Video Code of Ethics. It guides our interactions and empowers our employees. I hope you enjoy reading it below.

If anything at all with your Ross experience does not live up to your expectations be sure to reach out to us at *solutions@rossvideo.com*.

David Ross
CEO, Ross Video
dross@rossvideo.com

Ross Video Code of Ethics

Any company is the sum total of the people that make things happen. At Ross, our employees are a special group. Our employees truly care about doing a great job and delivering a high quality customer experience every day. This code of ethics hangs on the wall of all Ross Video locations to guide our behavior:

1. We will always act in our customers' best interest.
2. We will do our best to understand our customers' requirements.
3. We will not ship crap.
4. We will be great to work with.
5. We will do something extra for our customers, as an apology, when something big goes wrong and it's our fault.
6. We will keep our promises.
7. We will treat the competition with respect.
8. We will cooperate with and help other friendly companies.
9. We will go above and beyond in times of crisis. *If there's no one to authorize the required action in times of company or customer crisis - do what you know in your heart is right. (You may rent helicopters if necessary.)*

TSC-9902 · User Guide

- Ross Part Number: **9902DR-004-05**
- Release Date: May 3, 2018.

The information contained in this manual is subject to change without notice or obligation.

Copyright

©2018 Ross Video Limited, Ross®, and any related marks are trademarks or registered trademarks of Ross Video Limited. All other trademarks are the property of their respective companies. PATENTS ISSUED and PENDING. All rights reserved. No part of this publication may be reproduced, stored in a retrieval system, or transmitted in any form or by any means, mechanical, photocopying, recording or otherwise, without the prior written permission of Ross Video. While every precaution has been taken in the preparation of this document, Ross Video assumes no responsibility for errors or omissions. Neither is any liability assumed for damages resulting from the use of the information contained herein.

Patents

Patent numbers US 7,034,886; US 7,508,455; US 7,602,446; US 7,802,802 B2; US 7,834,886; US 7,914,332; US 8,307,284; US 8,407,374 B2; US 8,499,019 B2; US 8,519,949 B2; US 8,743,292 B2; GB 2,419,119 B; GB 2,447,380 B; and other patents pending.

Notice

The material in this manual is furnished for informational use only. It is subject to change without notice and should not be construed as commitment by Ross Video Limited. Ross Video Limited assumes no responsibility or liability for errors or inaccuracies that may appear in this manual.

Statement of Compliance

This product has been determined to be compliant with the applicable standards, regulations, and directives for the countries where the product is marketed.

Compliance documentation, such as certification or Declaration of Compliance for the product is available upon request by contacting techsupport@rossvideo.com. Please include the product; model number identifiers and serial number and country that compliance information is needed in request.

EMC Notices

United States of America - FCC Part 15

This equipment has been tested and found to comply with the limits for a class A Digital device, pursuant to part 15 of the FCC Rules.

These limits are designed to provide reasonable protection against harmful interference when the equipment is operated in a Commercial environment. This equipment generates, uses, and can radiate radio frequency energy and, if not installed and used in accordance with the instruction manual, may cause harmful interference to radio communications. Operation of this equipment in a residential area is likely to cause harmful interference in which case the user will be required to correct the interference at his own expense.

> **Notice** — *Changes or modifications to this equipment not expressly approved by Ross Video Ltd. could void the user's authority to operate this equipment.*

Canada

This Class A device complies with Canadian ICES-003 and part 15 of the FCC Rules.

Cet appariel numerique de la classe "A" est conforme a la norme NMB-003 du Canada.

European Union

This equipment is in compliance with the essential requirements and other relevant provisions established under regulation (EC) No 765/2008 and Decision No 768/2008/EC referred to as the “New Legislative Framework”.

Warning — *This equipment is compliant with Class A of CISPR 32. In a residential environment this equipment may cause radio interference.*

Australia/New Zealand

This equipment is in compliance with the provisions established under the Radiocommunications Act 1992 and Radiocommunications Labelling (Electromagnetic Compatibility) Notice 2008.

Korea

This equipment is in compliance with the provisions established under the Radio Waves Act.

International

This equipment has been tested under the requirements of CISPR 22:2008 or CISPR 32:2015 and found to comply with the limits for a Class A Digital device.

Notice — *This is a Class A product. In domestic environments, this product may cause radio interference, in which case the user may have to take adequate measures.*

Maintenance/User Serviceable Parts

Routine maintenance to this GearLite product is not required. This product contains no user serviceable parts. If the module does not appear to be working properly, please contact Technical Support using the numbers listed under the “Contact Us” section on the last page of this manual. All GearLite products are covered by a generous 3-year warranty and will be repaired without charge for materials or labor within this period. See the “Warranty and Repair Policy” section in this manual for details.

Environmental Information

The equipment may contain hazardous substances that could impact health and the environment.

To avoid the potential release of those substances into the environment and to diminish the need for the extraction of natural resources, Ross Video encourages you to use the appropriate take-back systems. These systems will reuse or recycle most of the materials from your end-of-life equipment in an environmentally friendly and health conscious manner.

The crossed-out wheeled bin symbol invites you to use these systems.

If you need more information on the collection, reuse, and recycling systems, please contact your local or regional waste administration. You can also contact Ross Video for more information on the environmental performances of our products.

Company Address

Ross Video Limited
8 John Street
Iroquois, Ontario
Canada, K0E 1K0

Ross Video Incorporated
P.O. Box 880
Ogdensburg, New York
USA 13669-0880

General Business Office:	(+1) 613 • 652 • 4886
Fax:	(+1) 613 • 652 • 4425
Technical Support:	(+1) 613 • 652 • 4886
After Hours Emergency:	(+1) 613 • 349 • 0006
E-mail (Technical Support):	techsupport@rossvideo.com
E-mail (General Information):	solutions@rossvideo.com
Website:	http://www.rossvideo.com

Introduction

This guide covers the installation, configuration, and use of the TSC-9902. The following chapters are included:

- "**Introduction**" summarizes the guide and provides important terms, and conventions.
- "**Hardware Overview**" describes the TSC-9902 hardware features and physical connections.
- "**Physical Installation**" provides instructions for the basic physical installation of the TSC-9902 in your system.
- "**Cabling**" provides an overview of connecting external devices to the TSC-9902.
- "**Operation**" provides information on the setup requirements for the TSC-9902.
- "**Warranty and Repair**" provides information on the warranty and repair policy for your TSC-9902.
- "**Technical Specifications**"provides the technical specifications for your TSC-9902.

Documentation Conventions

Special text formats are used in this guide to identify parts of the user interface, text that a user must enter, or a sequence of menus and sub-menus that must be followed to reach a particular command.

Interface Elements

Bold text is used to identify a user interface element such as a dialog box, menu item, or button. For example:

In the **Edit** dialog, click **Apply**.

User Entered Text

Courier text is used to identify text that a user must enter. For example:

In the **Language** box, enter **`English`**.

Referenced Guides

Italic text is used to identify the titles of referenced guides, manuals, or documents. For example:

For more information, refer to the ***DAC-9516 User Manual***.

Menu Sequences

Menu arrows are used in procedures to identify a sequence of menu items that you must follow. For example, if a step reads "**File** > **Save As**," you would select the **File** menu and then select **Save As**.

Important Instructions

Star icons are used to identify important instructions or features. For example:

✶ Contact your IT department before connecting to your facility network to ensure that there are no conflicts. They will provide you with an appropriate value for the IP Address, Subnet Mask, and Gateway for your TSC-9902.

Contacting Technical Support

At Ross Video, we take pride in the quality of our products, but if problems occur, help is as close as the nearest telephone.

Our 24-hour Hot Line service ensures you have access to technical expertise around the clock. After-sales service and technical support is provided directly by Ross Video personnel. During business hours (Eastern Time), technical support personnel are available by telephone. After hours and on weekends, a direct emergency technical

support phone line is available. If the technical support person who is on call does not answer this line immediately, a voice message can be left and the call will be returned shortly. This team of highly trained staff is available to react to any problem and to do whatever is necessary to ensure customer satisfaction.

- **Technical Support**: (+1) 613-652-4886
- **After Hours Emergency**: (+1) 613-349-0006
- **E-mail**: techsupport@rossvideo.com
- **Website**: http://www.rossvideo.com

Before You Begin

If you have questions pertaining to the operation of TSC-9902, contact us at the numbers listed in the section **"Contacting Technical Support"** on page 7. Our technical staff is always available for consultation, training, or service.

Overview

The TSC-9902 LTC to Serial Converter is a high-quality signal conversion solution within the family of GearLite compact, self-contained modular products. Supporting Linear Timecode Signal (LTC) to Serial conversion, the TSC-9902 is the ideal converter for interpreting linear timecode and sending the timecode over a serial port to another device, such as the Ross Video CrossOver Solo or Carbonite Black Solo Production Switcher.

The TSC-9902 provides a single DB-9 connector for 38,400 baud serial RS-422 communication, and one BNC connector for LTC input. Note that the shell of the BNC connector is isolated from ground. Power, LTC Status, and Serial Tx LEDs show activity status.

A universal power adapter and line cord, suitable for the country of use, is supplied with each module. Various mounting options are included that enable a wide range of installation choices.

Block Diagram

Figure 2.1 Simplified Block Diagram of TSC-9902 Functions

Features

Some features of the TSC-9902 include:

- 1 BNC connector for the LTC input
- 1 RS-422 Serial connector for the LTC output
- Accepts balanced[1] and unbalanced SMPTE 12M-1 LTC signals
- Power, LTC Status, and Serial Transmit Status indicator LEDs
- Small brick form factor
- 5V universal adapter with locking DC connector
- 3-year warranty

1. Balanced input signals require the use of a balun, or an adapter. Refer to the chapter "**Cabling**" on page 19 for details on using an adapter.

Hardware Overview

This chapter presents information on the TSC-9902 hardware components and features.

Chassis Faceplate Overview

The chassis faceplate of the TSC-9902 provides a silk-screen map of the connections available. **Figure 3.1** illustrates the TSC-9902 faceplate label.

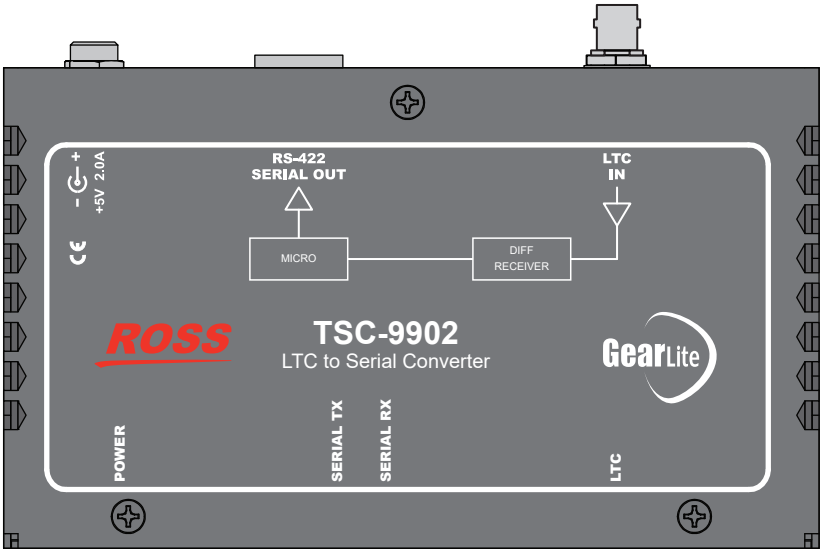

Figure 3.1 TSC-9902 — Faceplate Label

POWER Connection

The TSC-9902 has a standard miniature power jack (center pin positive) that connects to the PS-9000 power supply. (**Figure 3.2**)

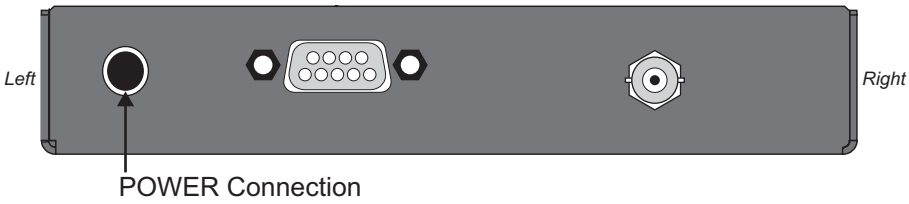

Figure 3.2 TSC-9902 (Top) — POWER Connection

For More Information on...

- connecting to the PS-9000, refer to the section "**Power Adapter and Supply**" on page 20.

Power Status LED

Refer to **Figure 3.3** for the location of the POWER status LED.

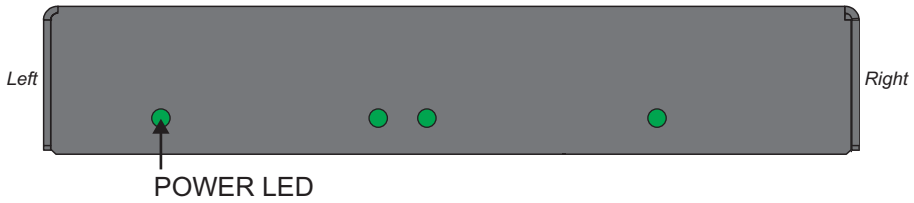

Figure 3.3 TSC-9902 (Bottom) — POWER LED

Table 3.1 describes the behavior the POWER LED.

Table 3.1 POWER Status LED

Status	Description
Green	When this LED is continually lit, power is supplied to the TSC-9902.
Off	If this LED is unlit, power is not supplied to the TSC-9902. Verify the cable.

LTC Input Connection

The TSC-9902 uses a female BNC connector for the LTC input. (**Figure 3.4**)

For a single-ended, or unbalanced, sources, connect directly using a BNC cable. The center pin carries the signal and the BNC cable shield is grounded.

For a double-ended, or balanced sources, connect **TC-** to the shield, the **TC+** to the center pin, and the cable shield is not connected to the TSC-9902. The other end of the cable shield should be connected to the chassis of the LTC Device.

The LTC IN BNC can support a minimum of 0.4Vpp to a maximum of 12Vpp.

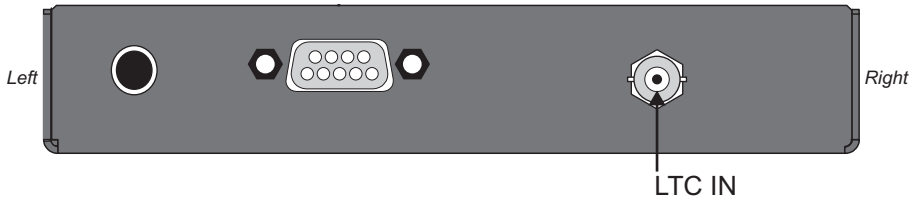

Figure 3.4 TSC-9902 (Top) — LTC Connection

LTC Status LED

Refer to **Figure 3.5** for the location of the LTC status LED.

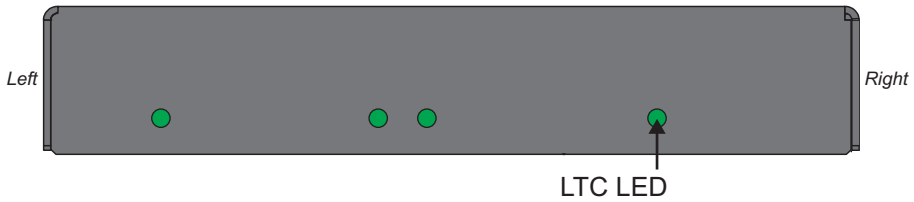

Figure 3.5 TSC-9902 (Bottom) — LTC LED

Table 3.2 describes the behavior the LTC LED.

Table 3.2 LTC Status LED

Status	Description
Green	This LED flashes when the TSC-9902 determines that there is a valid LTC signal on the input.
Off	When this LED is unlit, the TSC-9902 does not detect a valid LTC signal.

RS-422 Connection

The TSC-9902 provides a single RS-422 connector for serial communication. (**Figure 3.6**)

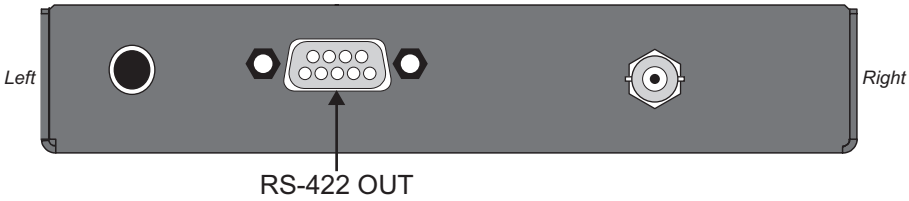

Figure 3.6 TSC-9902 (Top) — RS-422

The RS-422 OUT port is a DB9 female connector supporting a Baud Rate of 38400, 1 start bit, 1 stop bit, and no parity. **Table 8.2** on page 25 lists the pinouts for the RS-422 port.

SERIAL Tx Status LED

Refer to **Figure 3.5** for the location of the Serial status LEDs.

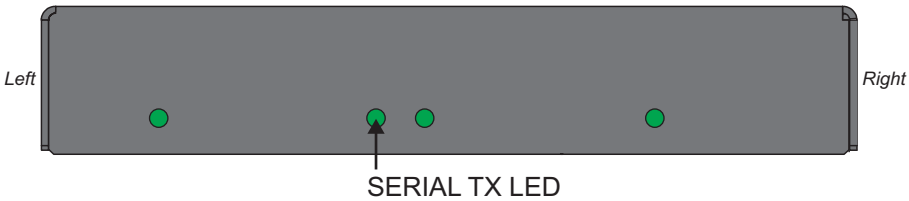

Figure 3.7 TSC-9902 (Bottom) — SERIAL TX LED

Table 3.3 describes the behavior of the Serial LEDs.

Table 3.3 Serial Status LEDs

Status	Description
Serial Rx	
Green	This LED is not implemented.
Serial Tx	
Yellow	When this LED is lit, the TSC-9902 is transmitting RS-422 serial communication signals.

Physical Installation

If you have questions pertaining to the installation of TSC-9902, please contact us at the numbers listed in the section **"Contacting Technical Support"** on page 7. Our technical staff is always available for consultation, training, or service.

For More Information on...

- the technical specifications for the TSC-9902, refer to the chapter "**Technical Specifications**" on page 25.

Static Discharge

Throughout this chapter, please heed the following cautionary note:

ESD Susceptibility — *Static discharge can cause serious damage to sensitive semiconductor devices. Avoid handling circuit boards in high static environments such as carpeted areas and when synthetic fiber clothing is worn. Always exercise proper grounding precautions when working on circuit boards and related equipment.*

Mounting and Installation

The TSC-9902 can be mounted in any convenient location. However, to ensure long life for this product, observe the following precautions and operating requirements:

- Maintain an ambient temperature of 20° to 40°C (68°F – 104°F).
- Allow for air circulation around the chassis for convectional cooling.

Many different mounting positions are possible with the included mounting hardware. Some installation options are permanent and require careful consideration of the final positioning before installation.

✶ In some mounting locations, the power adapter must be affixed in a similar manner as the chassis.

Other possible options include the use of adhesive magnetic sheets (not included) affixed to the chassis and the power adapter, for removable mounting on metal cabinets etc.

Cable ties may be necessary in some applications to relieve strain on the mounting hardware and the connectors.

Surface Mount Strips

The included VELCRO® brand surface mount strips allow the GearLite module and power supply to be affixed to a permanent location during use and easily removed for adjustments. Carefully consider the installation location before proceeding; the adhesive is very aggressive and is not easily removed. The adhesive will cure fully in 24 hours.

To install the Surface Mount Strips

1. Remove the **Protective Backing Film** from the adhesive on the bottom of the two VELCRO® brand **Surface Mount Strips**.

✶ A third VELCRO® brand **Surface Mount Strip** is available to mount the power adapter.

2. Adhere the **Surface Mount Strips** to the bottom side of the chassis **Figure 4.1**.

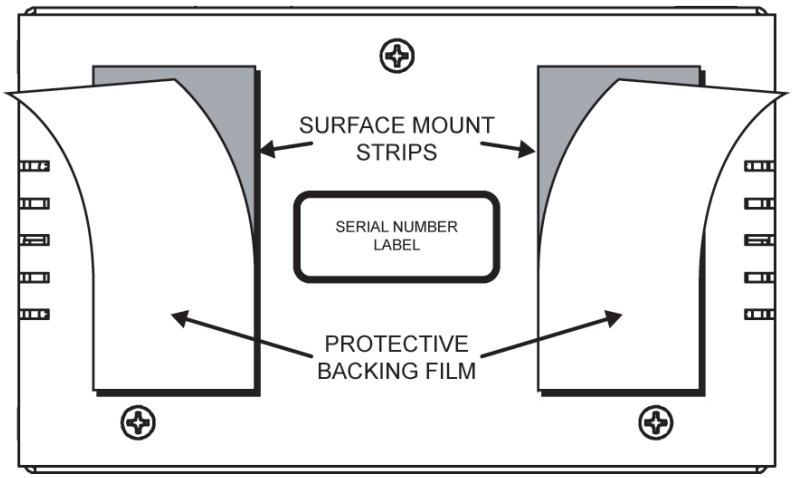

Figure 4.1 Surface Mount Installation Option

3. Remove the **Protective Backing Film** from the other side of the VELCRO® brand **Surface Mount Strips**.
4. Press the chassis into position on the surface you want to mount it to.

Flat Metal Plate

Use the flat metal plate for permanent mounting to a rack, a desk, or any other location where bolts or screws can be applied. Be sure to position the module to allow for operator adjustments, if required.

✶ Mounting screws are not provided by Ross Video.

To install the Flat Metal Plate

1. Remove the **2** screws from the bottom of the chassis.
2. Install the **Flat Metal Plate** onto the bottom of the chassis **Figure 4.2** using the screws removed in **Step 1.**.

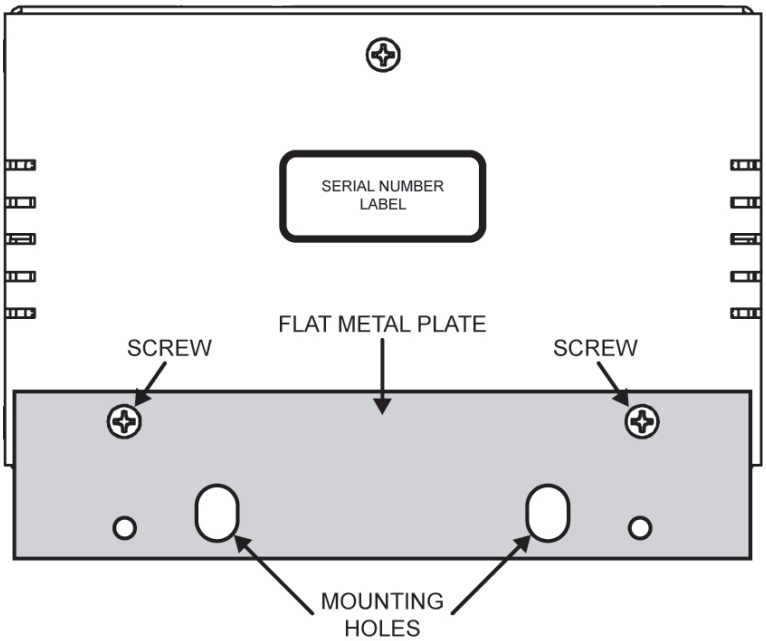

Figure 4.2 Flat Metal Plate Installation Option

3. Install the chassis in the desired location using the **Mounting Holes** on the **Flat Metal Plate**.

Non-Slip Pads

Four non-slip adhesive pads have been supplied for desktop placements. Simply remove the protective backing film from the adhesive and affix one non-slip pad to each of the four corners on the bottom of the chassis.

Optional Mounting Accessories

Ross Video is committed to providing practical solutions for the needs of your high-quality broadcast facility. The following products may be ordered separately to expand your installation options.

BPM-9000

The BPM-9000 Angle Mounting Bracket (**Figure 4.3**) allows a single GearLite module to be installed in positions not possible with the flat metal plate. The bracket has a 90° angle.

✶ Mounting screws are not provided by Ross Video.

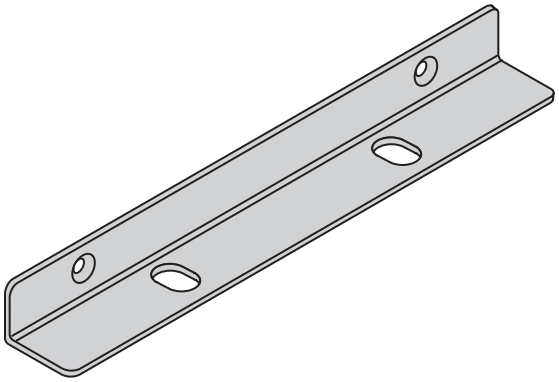

Figure 4.3 BPM-9000 90° Mounting Bracket

Cabling

This chapter provides information on connecting the TSC-9902 to external devices.

There are three connections to the TSC-9902:

- A power supply connection to the GearLite PS-9000 power adapter
- A female BNC connection for the LTC input
- A female DB9 RS-422 serial connection

✶ It is not necessary to terminate unused outputs.

Connecting to a Ross Production Switcher

The TSC-9902 can be used to connect an Audio Mixer to the CrossOver Solo or Carbonite Black Solo Production Switcher. The Interface Cables are not provided by Ross Video. Refer to the user documentation for your production switcher for details cabling to the serial port.

To connect an Audio Mixer to a Ross Production Switcher using the TSC-9902

1. Connect the TSC-9902 to the Audio Mixer as follows:
   a. Connect one end of a **BNC Cable** to the **LTC Timecode** BNC port on the TSC-9902.
   b. Connect the other end of the **BNC Cable** to an output port on the **Audio Mixer**.
2. Connect and secure the **9-Pin**, **Male** end of the **Interface Cable** to the **RS-422 Serial** port on the TSC-9902 (**Figure 5.1**).

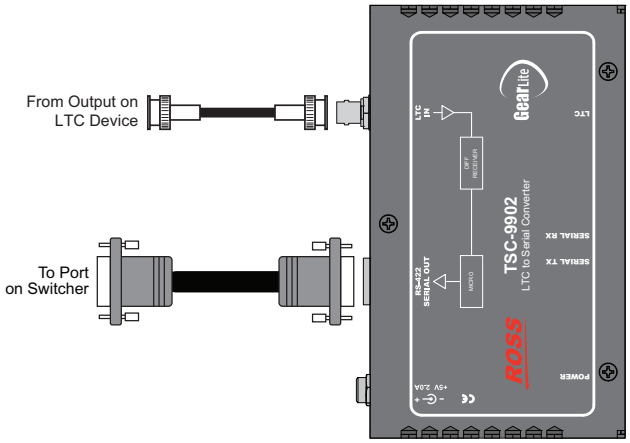

Figure 5.1 TSC-9902 Cabling — LTC Device to Production Switcher

3. Connect the TSC-9902 to a Ross Production Switcher as follows:
   - Connect the other end of the **Interface Cable** to the **EDITOR** port on the CrossOver Solo Production Switcher; or
   - Connect the other end of the **Interface Cable** to the **SERIAL** port on the Carbonite Black Solo Production Switcher. Refer to the ***Carbonite Black Solo Setup Manual*** for more information.

   Refer to **Table 5.1** for pinout details.

Table 5.1 Production Switcher Port Pinouts

Pin	CrossOver Solo EDITOR Port Signal	Carbonite Black Solo SERIAL Port Signal
1	n/c	Tx+
2	Tx-	Tx-
3	Rx+	Rx+
4	Ground	n/c
5	Ground	n/c
6	n/c	Rx-
7	Tx+	Ground
8	Rx-	Ground
9	n/c	--

Power Adapter and Supply

Connect the PS-9000 power adapter to the power supply connector. The PS-9000 provides regulated +5V DC (5%) @ up to 2A. The DC power cord has a locking connector that securely fastens into the power supply DC jack on the TSC-9902. The TSC-9902 has a standard miniature power jack (center pin positive).

Caution — *Use of improper adapters may damage the TSC-9902 and will void the warranty.*

To connect the TSC-9902 to the PS-9000

1. Connect the female end of the provided PS-9000 cable into the socket marked **POWER** on the TSC-9902 chassis.

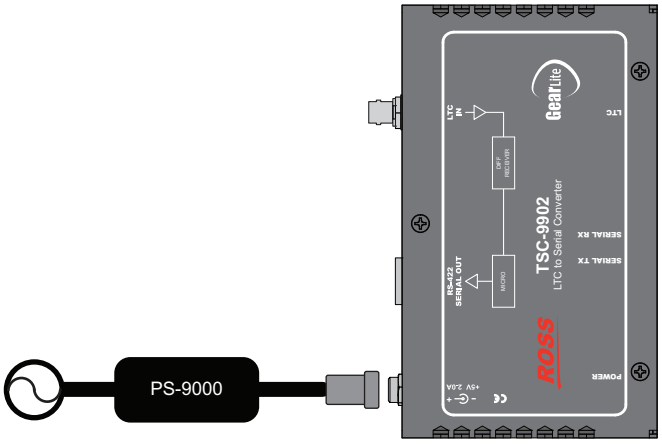

Note: It is recommended that you always connect the PS-9000 to the TSC-9902 before connecting to Mains Power.

Figure 5.2 TSC-9902 — Power Connection

2. Connect the PS-9000 to Mains Power.

Operation

The TSC-9902 transmits timecode information to the serial port using the same packet format as the incoming LTC packet. Refer to **Table 6.1** for the format the TSC-9902 uses to send timecode information out the **RS-422 Serial** port.

Table 6.1 LTC Serial Packet Format

Message	Byte	Description
Start of System	1 Byte	0xF0
Data Payload	8 Bytes	• Each payload byte represents a byte of the LTC code word (refer to ***SMPTE 12M-1 Table 11***). • All the LTC code word bits are sent out the RS-422 serial port with no translation. • The sync word is not sent out the RS-422 Serial port.
End of System	1 Byte	0xF7

Warranty and Repair

The TSC-9902 is warranted to be free of any defect with respect to performance, quality, reliability, and workmanship for a period of **THREE (3)** years from the date of delivery to the customer. In the event that your RossGear TSC-9902 proves to be defective in any way during this warranty period, Ross Video Limited reserves the right to repair or replace this piece of equipment with a unit of equal or superior performance characteristics.

Should you find that this TSC-9902 has failed after your warranty period has expired, we will repair your defective product should suitable replacement components be available. You, the owner, will bear any labor and/or part costs incurred in the repair or refurbishment of said equipment beyond the THREE (3) year warranty period.

In no event shall Ross Video Limited be liable for direct, indirect, special, incidental, or consequential damages (including loss of profits) incurred by the use of this product. Implied warranties are expressly limited to the duration of this warranty.

This TSC-9902 User Manual provides all pertinent information for the safe installation and operation of your RossGear Product. Ross Video policy dictates that all repairs to the TSC-9902 are to be conducted only by an authorized Ross Video Limited factory representative. Therefore, any unauthorized attempt to repair this product, by anyone other than an authorized Ross Video Limited factory representative, will automatically void the warranty. Please contact Ross Video Technical Support for more information.

In Case of Problems

Should any problem arise with your TSC-9902, please contact the Ross Video Technical Support Department. (Contact information is supplied at the end of this publication.)

A Return Material Authorization number (RMA) will be issued to you, as well as specific shipping instructions, should you wish our factory to repair your TSC-9902. If required, a temporary replacement module will be made available at a nominal charge. Any shipping costs incurred will be the responsibility of you, the customer. All products shipped to you from Ross Video Limited will be shipped collect.

The Ross Video Technical Support Department will continue to provide advice on any product manufactured by Ross Video Limited, beyond the warranty period without charge, for the life of the equipment.

Technical Specifications

This chapter provides technical information for TSC-9902.

✶ Specifications are subject to change without notice.

RS-422 Output

Table 8.1 Technical Specifications — RS-422 Port

Item	Specifications
Transmission Standard	RS-422
Baud Rate (fixed)	38,400bps
Start Bit	1
Stop Bit	1
Parity	None

RS-422 Pinouts

Table 8.2 Pinouts — RS-422 Port

Pin	RS-422
1	n/c
2	RxA (Rx-)
3	TxB (Tx+)
4	Ground
5	Ground
6	n/c
7	RxB (Rx+)
8	TxA (Tx-)
9	n/c

LTC Input

Table 8.3 Technical Specifications — LTC Input

Item	Specifications
Standard Accommodated	SMPTE 12M-1
Delay	1 Frame + 2.2ms from LTC to RS-422 OUT
Input Voltage	0.4 to 12Vpp (balanced or unbalanced)
Speed	Normal forward play speed at 25 or 30 frames/second
Impedance	High Z (40kohm)

Power

Table 8.4 Technical Specifications — Power

Item	Specifications
Required Voltage	+5V DC (5% regulation)
Current Consumption	<200mA typical
Total Power	<1W typical

Environment

Table 8.5 Technical Specifications — Environment

Item	Specifications
Thermal Environment	0°C – 40°C (32°F – 104°F) ambient, non-condensing

Dimensions

Table 8.6 Technical Specifications — Dimensions

Item	Specifications
Physical Dimensions	5” x 3.5” x 1” (13cm x 9.5cm x 2.5cm)
Weight	11.5oz (326g)