SEA-9203 User Guide

www.rossvideo.com

ROSS

Thank You for Choosing Ross

You've made a great choice. We expect you will be very happy with your purchase of Ross Technology.

Our mission is to:

1. Provide a Superior Customer Experience
   - offer the best product quality and support
2. Make Cool Practical Technology
   - develop great products that customers love

Ross has become well known for the Ross Video Code of Ethics. It guides our interactions and empowers our employees. I hope you enjoy reading it below.

If anything at all with your Ross experience does not live up to your expectations be sure to reach out to us at *solutions@rossvideo.com*.

David Ross
CEO, Ross Video
dross@rossvideo.com

Ross Video Code of Ethics

Any company is the sum total of the people that make things happen. At Ross, our employees are a special group. Our employees truly care about doing a great job and delivering a high quality customer experience every day. This code of ethics hangs on the wall of all Ross Video locations to guide our behavior:

1. We will always act in our customers' best interest.
2. We will do our best to understand our customers' requirements.
3. We will not ship crap.
4. We will be great to work with.
5. We will do something extra for our customers, as an apology, when something big goes wrong and it's our fault.
6. We will keep our promises.
7. We will treat the competition with respect.
8. We will cooperate with and help other friendly companies.
9. We will go above and beyond in times of crisis. *If there's no one to authorize the required action in times of company or customer crisis - do what you know in your heart is right. (You may rent helicopters if necessary.)*

SEA-9203 · User Guide

- Ross Part Number: **9203DR-004-04**
- Release Date: June 4, 2018.

The information contained in this manual is subject to change without notice or obligation.

Copyright

©2018 Ross Video Limited, Ross®, and any related marks are trademarks or registered trademarks of Ross Video Limited. All other trademarks are the property of their respective companies. PATENTS ISSUED and PENDING. All rights reserved. No part of this publication may be reproduced, stored in a retrieval system, or transmitted in any form or by any means, mechanical, photocopying, recording or otherwise, without the prior written permission of Ross Video. While every precaution has been taken in the preparation of this document, Ross Video assumes no responsibility for errors or omissions. Neither is any liability assumed for damages resulting from the use of the information contained herein.

Patents

Patent numbers US 7,034,886; US 7,508,455; US 7,602,446; US 7,802,802 B2; US 7,834,886; US 7,914,332; US 8,307,284; US 8,407,374 B2; US 8,499,019 B2; US 8,519,949 B2; US 8,743,292 B2; GB 2,419,119 B; GB 2,447,380 B; and other patents pending.

Notice

The material in this manual is furnished for informational use only. It is subject to change without notice and should not be construed as commitment by Ross Video Limited. Ross Video Limited assumes no responsibility or liability for errors or inaccuracies that may appear in this manual.

Safety Notices

Refer to the "**Important Regulatory and Safety Notices**" document that accompanied your product.

Statement of Compliance

This product has been determined to be compliant with the applicable standards, regulations, and directives for the countries where the product is marketed.

Compliance documentation, such as certification or Declaration of Compliance for the product is available upon request by contacting techsupport@rossvideo.com. Please include the product; model number identifiers and serial number and country that compliance information is needed in request.

EMC Notices

United States of America - FCC Part 15

This equipment has been tested and found to comply with the limits for a class A Digital device, pursuant to part 15 of the FCC Rules.

These limits are designed to provide reasonable protection against harmful interference when the equipment is operated in a Commercial environment. This equipment generates, uses, and can radiate radio frequency energy and, if not installed and used in accordance with the instruction manual, may cause harmful interference to radio communications. Operation of this equipment in a residential area is likely to cause harmful interference in which case the user will be required to correct the interference at his own expense.

> **Notice** — *Changes or modifications to this equipment not expressly approved by Ross Video Ltd. could void the user's authority to operate this equipment.*

Canada

This Class A device complies with Canadian ICES-003 and part 15 of the FCC Rules.

Cet appariel numerique de la classe "A" est conforme a la norme NMB-003 du Canada.

European Union

This equipment is in compliance with the essential requirements and other relevant provisions established under regulation (EC) No 765/2008 and Decision No 768/2008/EC referred to as the “New Legislative Framework”.

Warning — *This equipment is compliant with Class A of CISPR 32. In a residential environment this equipment may cause radio interference.*

Australia/New Zealand

This equipment is in compliance with the provisions established under the Radiocommunications Act 1992 and Radiocommunications Labelling (Electromagnetic Compatibility) Notice 2008.

Korea

This equipment is in compliance with the provisions established under the Radio Waves Act.

International

This equipment has been tested under the requirements of CISPR 22:2008 or CISPR 32:2015 and found to comply with the limits for a Class A Digital device.

Notice — *This is a Class A product. In domestic environments, this product may cause radio interference, in which case the user may have to take adequate measures.*

Maintenance/User Serviceable Parts

Routine maintenance to this GearLite product is not required. This product contains no user serviceable parts. If the module does not appear to be working properly, please contact Technical Support using the numbers listed under the “Contact Us” section on the last page of this manual. All GearLite products are covered by a generous 3-year warranty and will be repaired without charge for materials or labor within this period. See the “Warranty and Repair Policy” section in this manual for details.

Environmental Information

The equipment may contain hazardous substances that could impact health and the environment.

To avoid the potential release of those substances into the environment and to diminish the need for the extraction of natural resources, Ross Video encourages you to use the appropriate take-back systems. These systems will reuse or recycle most of the materials from your end-of-life equipment in an environmentally friendly and health conscious manner.

The crossed-out wheeled bin symbol invites you to use these systems.

If you need more information on the collection, reuse, and recycling systems, please contact your local or regional waste administration. You can also contact Ross Video for more information on the environmental performances of our products.

Company Address

Ross Video Limited
8 John Street
Iroquois, Ontario
Canada, K0E 1K0

Ross Video Incorporated
P.O. Box 880
Ogdensburg, New York
USA 13669-0880

General Business Office:	(+1) 613 • 652 • 4886
Fax:	(+1) 613 • 652 • 4425
Technical Support:	(+1) 613 • 652 • 4886
After Hours Emergency:	(+1) 613 • 349 • 0006
E-mail (Technical Support):	techsupport@rossvideo.com
E-mail (General Information):	solutions@rossvideo.com
Website:	http://www.rossvideo.com

Introduction

This guide covers the installation, configuration, and use of the SEA-9203. The following chapters are included:

- "**Introduction**" summarizes the guide and provides important terms, and conventions.
- "**Before You Begin**" provides an overview of the features of the SEA-9203.
- "**Hardware Overview**" describes the SEA-9203 hardware features and physical connections.
- "**Physical Installation**" provides instructions for the basic physical installation of the SEA-9203 in your system.
- "**Cabling**" provides an overview of connecting external devices to the SEA-9203.
- "**Setup**" provides an overview of specifying the output format of the SEA-9203.
- "**Technical Specifications**"provides the technical specifications for your SEA-9203.
- "**Warranty and Repair**" provides information on the warranty and repair policy for your SEA-9203.

Documentation Conventions

Special text formats are used in this guide to identify parts of the user interface, text that a user must enter, or a sequence of menus and sub-menus that must be followed to reach a particular command.

Interface Elements

Bold text is used to identify a user interface element such as a dialog box, menu item, or button. For example:

In the **Edit** dialog, click **Apply**.

User Entered Text

Courier text is used to identify text that a user must enter. For example:

In the **Language** box, enter **`English`**.

Referenced Guides

Italic text is used to identify the titles of referenced guides, manuals, or documents. For example:

For more information, refer to the ***DAC-9516 User Manual***.

Menu Sequences

Menu arrows are used in procedures to identify a sequence of menu items that you must follow. For example, if a step reads "**File** > **Save As**," you would select the **File** menu and then select **Save As**.

Important Instructions

Star icons are used to identify important instructions or features. For example:

✶ Contact your IT department before connecting to your facility network to ensure that there are no conflicts. They will provide you with an appropriate value for the IP Address, Subnet Mask, and Gateway for your SEA-9203.

Contacting Technical Support

At Ross Video, we take pride in the quality of our products, but if problems occur, help is as close as the nearest telephone.

Our 24-hour Hot Line service ensures you have access to technical expertise around the clock. After-sales service and technical support is provided directly by Ross Video personnel. During business hours (Eastern Time),

technical support personnel are available by telephone. After hours and on weekends, a direct emergency technical support phone line is available. If the technical support person who is on call does not answer this line immediately, a voice message can be left and the call will be returned shortly. This team of highly trained staff is available to react to any problem and to do whatever is necessary to ensure customer satisfaction.

- **Technical Support**: (+1) 613-652-4886
- **After Hours Emergency**: (+1) 613-349-0006
- **E-mail**: techsupport@rossvideo.com
- **Website**: http://www.rossvideo.com

Before You Begin

If you have questions pertaining to the operation of SEA-9203, contact us at the numbers listed in the section **"Contacting Technical Support"** on page 7. Our technical staff is always available for consultation, training, or service.

Overview

The SEA-9203 Multi-Definition SDI Equalizing Amplifier is part of the GearLite 9000 series of self-contained, small brick-format modules. The SEA-9203 is designed for use in both SD and HD systems where signals of more than one digital standard are distributed. The amplifier automatically equalizes up to 305m (1000ft) of Belden 8281 input cable at 270Mbps or up to 100m (325ft) of Belden 1694A input cable at 1485Mbps. The SEA-9203 operates on all serial digital standards, from 143Mbps up to and including 1485Mbps. Special measures have been taken to ensure excellent return loss at both input and output. This ensures error-free performance with short cables.

The front panel of the SEA-9203 chassis provides visual performance indicators and a user accessible DIP switch to select either SD or HD signals.

The SEA-9203 is delivered with a universal power adapter and line cord suitable for the country of use. Various mounting options are included that allow a wide range of installation choices. The SEA-9203 provides a broadcast-quality SDI distribution solution in a small, stand-alone package.

✶ In this guide, the term SDI (Serial Digital Interface) is used throughout. SDI refers to both Standard Definition (up to 540Mbps) and High Definition (1485Mbps) signals.

Block Diagram

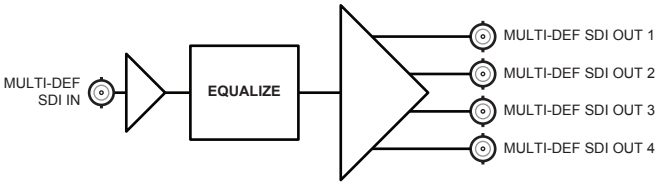

Figure 2.1 Simplified Block Diagram of SEA-9203 Functions

Features

Some features of the SEA-9203 include:

- Automatically supports common data rates (143Mbps to 1485Mbps)
- Automatic input cable equalization up to 305m (1000ft) of Belden 8281 cable @ 270Mbps or up to 100m (325ft) of Belden 1694A cable @ 1485Mbps
- Terminating input 75ohms
- Visual indicator LEDs for power, status, and signal setting
- Small brick form factor
- 5V universal adapter with locking DC connector
- 3-year warranty

Hardware Overview

This chapter presents information on the SEA-9203 hardware components and features.

Chassis Faceplate Overview

The chassis faceplate of the SEA-9203 provides a silk-screen map of the connections available. **Figure 3.1** illustrates the SEA-9203 faceplate label.

The chassis of the SEA-9203 also includes four LEDs that display the status of SDI, and power connections.

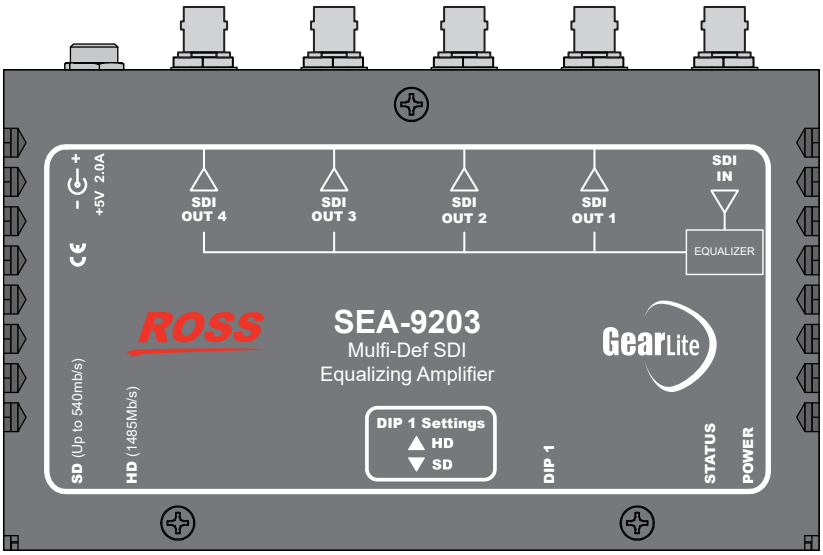

Figure 3.1 SEA-9203 — Faceplate Label

POWER Connection

The SEA-9203 has a standard miniature power jack (center pin positive) that connects to the PS-9000 power supply. (**Figure 3.2**)

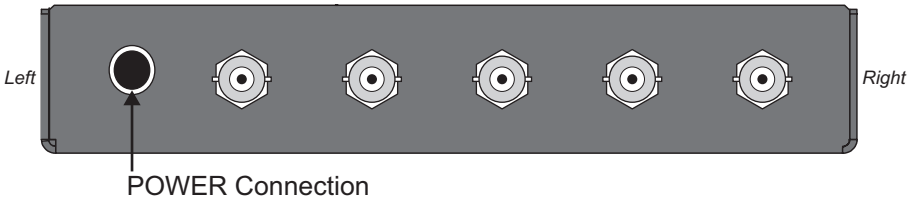

Figure 3.2 SEA-9203 (Top) — PWR Connection

POWER LED

The POWER LED is located on the bottom of the chassis. (**Figure 3.7**)

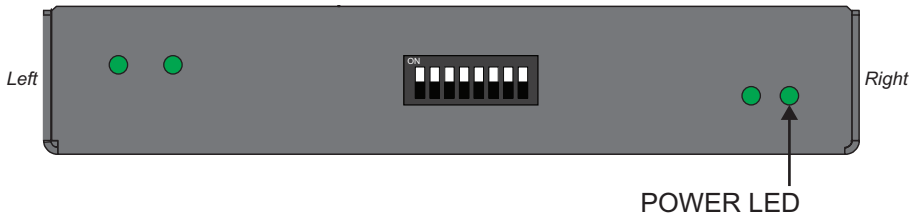

Figure 3.3 SEA-9203 (Bottom) — POWER LED

Table 3.2 describes the behavior of the POWER LED.

Table 3.1 POWER LED

Status	Description
Green	When lit, this LED indicates the SEA-9203 is powered on.
Off	When unlit, this LED indicates the SEA-9203 is not powered on. Verify that the PS-9000 connections are valid.

SDI Connections

The SEA-9203 provides a BNC for one SDI input and four BNCs for the SDI outputs. (**Figure 3.4**, **Figure 3.5**)

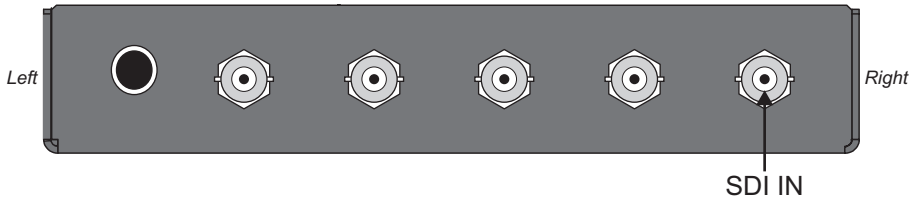

Figure 3.4 SEA-9203 (Top) — SDI Input Connection

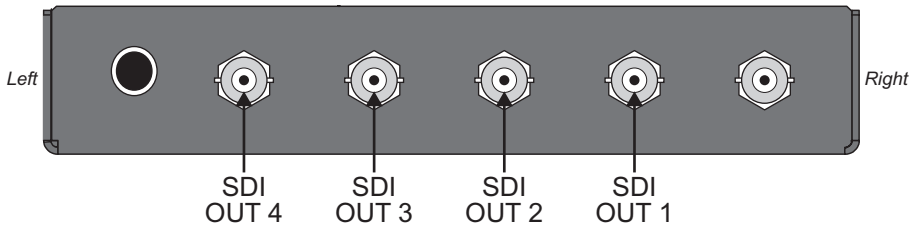

Figure 3.5 SEA-9203 (Top) — SDI Output Connections

DIP Switches

The SEA-9203 provides a bank of eight DIP Switches for selecting the type of signal the module outputs. (**Figure 3.6**) Refer to "**Setup**" on page 21 for details on using the DIP Switches.

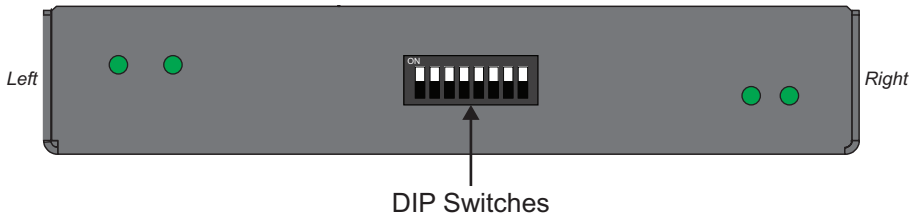

Figure 3.6 SEA-9203 (Bottom) — DIP Switches

SDI Mode LEDS

The SD and HD LEDs are located on the bottom of the chassis. (**Figure 3.7**)

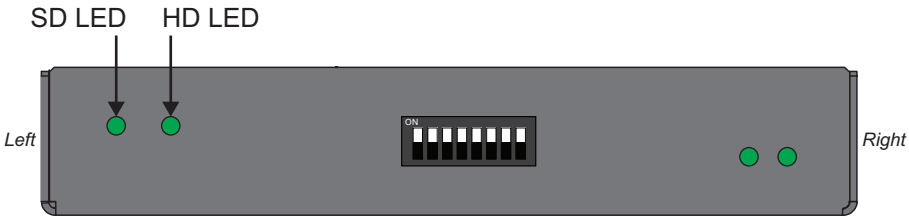

Figure 3.7 SEA-9203 — SDI LEDs

Table 3.2 describes the behavior of the SD and HD LEDs.

Table 3.2 SD and HD LEDs

Status	Description
SD	
Green	When lit green, this LED indicates that an SD signal is selected via the DIP Switches.
HD	
Green	When lit green, this LED indicates that an HD signal is selected via the DIP Switches.

STATUS LED

The SEA-9203 provides a STATUS LED reports the status of the SDI input signal. (**Figure 3.8**)

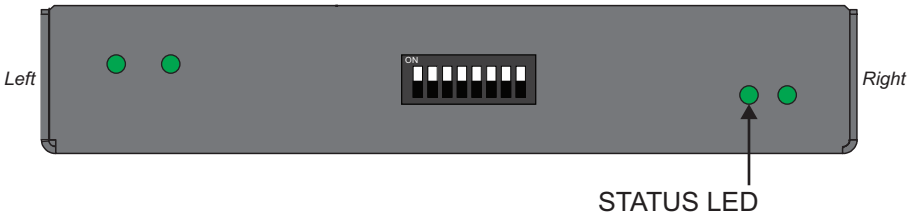

Figure 3.8 SEA-9203 (Bottom) — STATUS LED

Table 3.2 describes the behavior of the STATUS LED.

Table 3.3 STATUS LED

Status	Description
Green	When lit green, this LED indicates a valid input signal.
Red	When lit red, this LED indicates that an input signal carried could not be detected.

Physical Installation

If you have questions pertaining to the installation of SEA-9203, please contact us at the numbers listed in the section **"Contacting Technical Support"** on page 7. Our technical staff is always available for consultation, training, or service.

For More Information on...

- the technical specifications for the SEA-9203, refer to the chapter "**Technical Specifications**" on page 25.

Static Discharge

Throughout this chapter, please heed the following cautionary note:

ESD Susceptibility — *Static discharge can cause serious damage to sensitive semiconductor devices. Avoid handling circuit boards in high static environments such as carpeted areas and when synthetic fiber clothing is worn. Always exercise proper grounding precautions when working on circuit boards and related equipment.*

Mounting and Installation

The SEA-9203 can be mounted in any convenient location. However, to ensure long life for this product, observe the following precautions and operating requirements:

- Maintain an ambient temperature of 20° to 40°C (68°F – 104°F).
- Allow for air circulation around the chassis for convectional cooling.

Many different mounting positions are possible with the included mounting hardware. Some installation options are permanent and require careful consideration of the final positioning before installation.

✶ In some mounting locations, the power adapter must be affixed in a similar manner as the chassis.

Other possible options include the use of adhesive magnetic sheets (not included) affixed to the chassis and the power adapter, for removable mounting on metal cabinets etc.

Cable ties may be necessary in some applications to relieve strain on the mounting hardware and the connectors.

Surface Mount Strips

The included VELCRO® brand surface mount strips allow the GearLite module and power supply to be affixed to a permanent location during use and easily removed for adjustments. Carefully consider the installation location before proceeding; the adhesive is very aggressive and is not easily removed. The adhesive will cure fully in 24 hours.

To install the Surface Mount Strips

1. Remove the **Protective Backing Film** from the adhesive on the bottom of the two VELCRO® brand **Surface Mount Strips**.

✶ A third VELCRO® brand **Surface Mount Strip** is available to mount the power adapter.

2. Adhere the **Surface Mount Strips** to the bottom side of the chassis **Figure 4.1**.

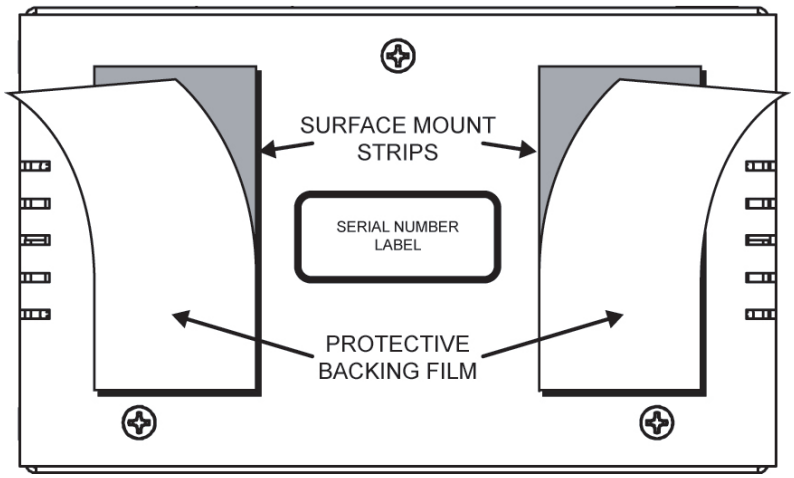

Figure 4.1 Surface Mount Installation Option

3. Remove the **Protective Backing Film** from the other side of the VELCRO® brand **Surface Mount Strips**.
4. Press the chassis into position on the surface you want to mount it to.

Flat Metal Plate

Use the flat metal plate for permanent mounting to a rack, a desk, or any other location where bolts or screws can be applied. Be sure to position the module to allow for operator adjustments, if required.

✶ Mounting screws are not provided by Ross Video.

To install the Flat Metal Plate

1. Remove the **2** screws from the bottom of the chassis.
2. Install the **Flat Metal Plate** onto the bottom of the chassis **Figure 4.2** using the screws removed in **Step 1.**.

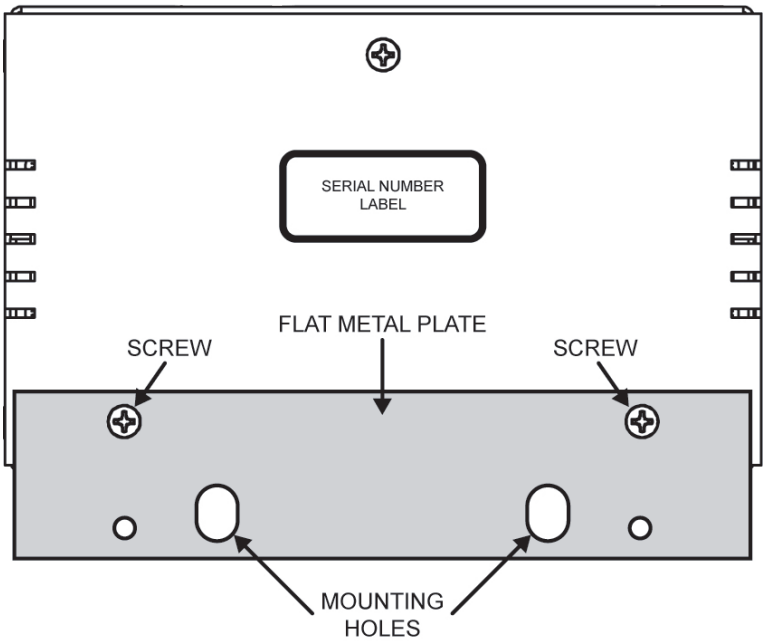

Figure 4.2 Flat Metal Plate Installation Option

3. Install the chassis in the desired location using the **Mounting Holes** on the **Flat Metal Plate**.

Non-Slip Pads

Four non-slip adhesive pads have been supplied for desktop placements. Simply remove the protective backing film from the adhesive and affix one non-slip pad to each of the four corners on the bottom of the chassis.

Cabling

This chapter provides an overview of connecting external devices to the SEA-9203.

SDI Cabling

Connect the SDI signals as required from the SDI BNCs. It is not necessary to terminated unused outputs. SDI IN is internally terminated at 75ohm. Refer to **Figure 5.1** for cabling designations.

✶ SDI OUT 1 and 3 are inverting. SDI OUT 2 and 4 are non-inverting.

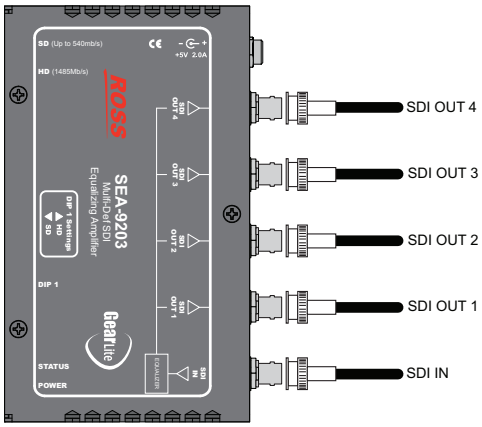

Figure 5.1 SEA-9203 — SDI Connections

Power Adapter and Supply

The PS-9000 provides regulated +5V DC (5%) @ up to 2A. The DC power cord has a locking connector that securely fastens into the power supply DC jack on the SEA-9203. The SEA-9203 has a standard miniature power jack (center pin positive).

Caution — *Use of improper adapters may damage the SEA-9203 and will void the warranty.*

To connect the SEA-9203 to the PS-9000

1. Connect the female end of the PS-9000 cable into the socket marked **POWER** on the SEA-9203 chassis.

✶ It is recommended that you always connect the PS-9000 to the SEA-9203 before connecting to Mains Power.

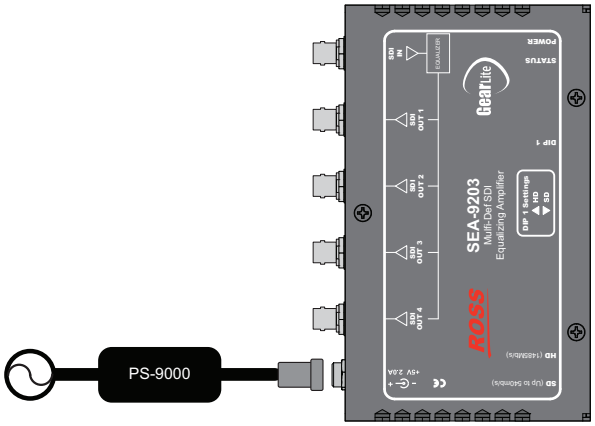

Figure 5.2 SEA-9203 — Power Connection

2. Connect the PS-9000 to Mains Power.

Setup

The bottom edge of the SEA-9203 includes a block of eight DIP Switches. This chapter summarizes how to use SW1 to set the output format.

✶ **SW2** to **SW8** are not implemented.

Selecting the Output Video Format

SW1 enables you to specify whether the SEA-9203 passes a SMPTE-compliant HD or SD signal.

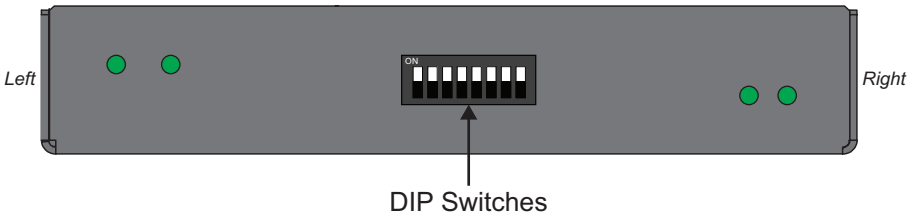

Figure 6.1 SEA-9203 — Location of DIP Switches

Set **SW1** as follows:

- For HD signals — Set **SW1** in the Up position.
- For SD signals — Set **SW1** in the Down position.

Multi-Rate Operation

If the SEA-9203 is used in an environment where both SD and HD signals are in use, set the **SW1** to the Up position. The SD signals will be equalized and distributed cleanly, although all SMPTE specifications may not be met.

Warranty and Repair

The SEA-9203 is warranted to be free of any defect with respect to performance, quality, reliability, and workmanship for a period of **THREE (3)** years from the date of delivery to the customer. In the event that your RossGear SEA-9203 proves to be defective in any way during this warranty period, Ross Video Limited reserves the right to repair or replace this piece of equipment with a unit of equal or superior performance characteristics.

Should you find that this SEA-9203 has failed after your warranty period has expired, we will repair your defective product should suitable replacement components be available. You, the owner, will bear any labor and/or part costs incurred in the repair or refurbishment of said equipment beyond the THREE (3) year warranty period.

In no event shall Ross Video Limited be liable for direct, indirect, special, incidental, or consequential damages (including loss of profits) incurred by the use of this product. Implied warranties are expressly limited to the duration of this warranty.

This SEA-9203 User Manual provides all pertinent information for the safe installation and operation of your RossGear Product. Ross Video policy dictates that all repairs to the SEA-9203 are to be conducted only by an authorized Ross Video Limited factory representative. Therefore, any unauthorized attempt to repair this product, by anyone other than an authorized Ross Video Limited factory representative, will automatically void the warranty. Please contact Ross Video Technical Support for more information.

In Case of Problems

Should any problem arise with your SEA-9203, please contact the Ross Video Technical Support Department. (Contact information is supplied at the end of this publication.)

A Return Material Authorization number (RMA) will be issued to you, as well as specific shipping instructions, should you wish our factory to repair your SEA-9203. If required, a temporary replacement module will be made available at a nominal charge. Any shipping costs incurred will be the responsibility of you, the customer. All products shipped to you from Ross Video Limited will be shipped collect.

The Ross Video Technical Support Department will continue to provide advice on any product manufactured by Ross Video Limited, beyond the warranty period without charge, for the life of the equipment.

Technical Specifications

This chapter provides technical information for SEA-9203.

✶ Specifications are subject to change without notice.

SDI Input

Table 8.1 Technical Specifications — SDI Input

Item	Specifications
Number of Inputs	1
Data Rates	SMPTE 259M: 143Mbps, 177Mbps, 270Mbps, 360Mbps
	SMPTE 344M: 540Mbps
	SMPTE 292M: 1483.5Mbps, 1485Mbps
Impedance	75ohm terminating
Equalization (Belden 1694A cable)	SD: 305m (1000ft)
	HD: 100m (325ft)
Return Loss	SD: >20dB to 360MHz
	HD: >15dB to 1485MHz

SDI Outputs

Table 8.2 Technical Specifications — SDI Outputs

Item	Specifications
Number of Outputs	4
Signal Level	800mV ±10%
DC Offset	0V ±50mV
Rise and Fall Time	SD: 700ps typical
	HD: 120ps typical
Overshoot	<8% typical
Impedance	75ohm
Return Loss	SD: >22dB to 360MHz
	HD: 16dB to 1485MHz

Power

Table 8.3 Technical Specifications — Power

Item	Specifications
Required Voltage	5V DC (5% regulation)
Power Consumption	<1.0W @ 270Mbps (191mA)

Environment

Table 8.4 Technical Specifications — Dimensions

Item	Specifications
Operating Range	20°C to 40°C ambient (68°F to 104°F)

Dimensions

Table 8.5 Technical Specifications — Dimensions

Item	Specifications
Physical Dimensions	13cm x 9.5cm x 2.5cm (5” x 4” x 1”)
Weight	326g (11.5oz)