Ross Video Limited

# DSA-8004A

## Dual Serial Equalizing Amplifier

## User Manual

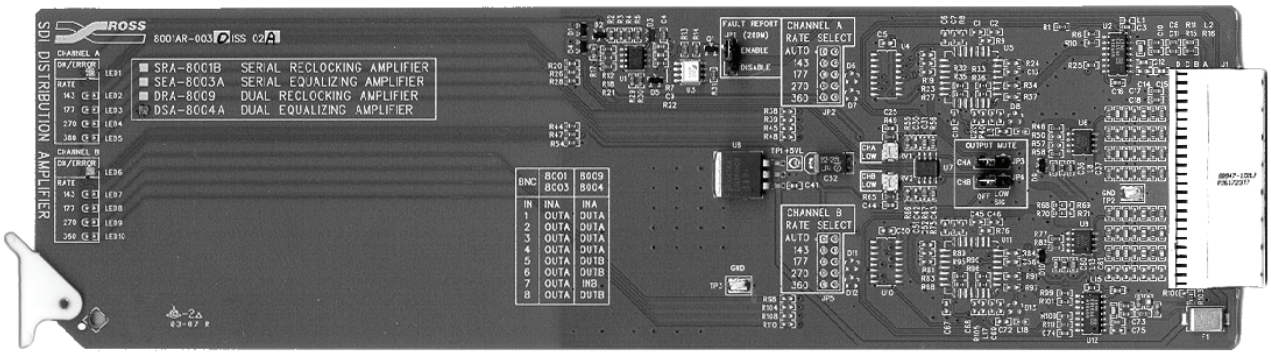


Ross Part Number: 8004ADR-004
Issue: 01

Cool Practical Technology™

## DSA-8004A • Dual Serial Equalizing Amplifier User Manual


- Ross Part Number: **8004ADR-004**
- Document Issue: **01**
- Release Date: February 5, 2007. Printed in Canada.


The information contained in this User Manual is subject to change without notice or obligation.

## Copyright


**© 2007 Ross Video Limited**. All rights reserved.

Contents of this publication may not be reproduced in any form without the written permission of Ross Video Limited. Reproduction or reverse engineering of copyrighted software is prohibited.


## Notice

The material in this manual is furnished for informational use only. It is subject to change without notice and should not be construed as a commitment by Ross Video Limited. Ross Video Limited assumes no responsibility or liability for errors or inaccuracies that may appear in this manual.

## Trademarks


- ROSS is a registered trademark of Ross Video Limited.
- Ross, ROSS®, and MLE are registered trademarks of Ross Video Limited.
- All other product names and any registered and unregistered trademarks mentioned in this manual are used for identification purposes only and remain the exclusive property of their respective owners.

## Important Regulatory and Safety Notices

Before using this product and any associated equipment, refer to the “Important Safety Instructions” listed below so as to avoid personnel injury and to prevent product damage.

Products may require specific equipment, and /or installation procedures be carried out to satisfy certain regulatory compliance requirements. Notices have been included in this publication to call attention to these Specific requirements.

### Symbol Meanings

This symbol on the equipment refers you to important operating and maintenance (servicing) instructions within the Product Manual Documentation. Failure to heed this information may present a major risk of damage or injury to persons or equipment.

**Warning**

The symbol with the word **“Warning”** within the equipment manual indicates a potentially hazardous situation, which if not avoided, could result in death or serious injury.

**Caution**

The symbol with the word “**Caution**” within the equipment manual indicates a potentially hazardous situation, which if not avoided, may result in minor or moderate injury. It may also be used to alert against unsafe practices.

**Notice**

The symbol with the word “**Notice**” within the equipment manual indicates a situation, which if not avoided, may result in major or minor equipment damage or a situation which could place the equipment in a non-compliant operating state.

**ESD Susceptibility**

This symbol is used to alert the user that an electrical or electronic device or assembly is susceptible to damage from an ESD event.

### Important Safety Instructions

**Caution**

This product is intended to be a component product of the RossGear 8000 series frame. Refer to the RossGear 8000 series frame User Manual for important safety instructions regarding the proper installation and safe operation of the frame as well as it’s component products.

**Warning**

Certain parts of this equipment namely the power supply area still present a safety hazard, with the power switch in the OFF position. To avoid electrical shock, disconnect all A/C power cords from the chassis' rear appliance connectors before servicing this area.

**Warning**

Service barriers within this product are intended to protect the operator and service personnel from hazardous voltages. For continued safety, replace all barriers after any servicing.

This product contains safety critical parts, which if incorrectly replaced may present a risk of fire or electrical shock. Components contained within the product’s power supplies and power supply area, are not intended to be customer serviced and should be returned to the factory for repair.

To reduce the risk of fire, replacement fuses must be the same type and rating.

Only use attachments/accessories specified by the manufacturer.

## EMC Notices

### *US FCC Part 15*

This equipment has been tested and found to comply with the limits for a class A Digital device, pursuant to part 15 of the FCC Rules. These limits are designed to provide reasonable protection against harmful interference when the equipment is operated in a commercial environment. This equipment generates, uses, and can radiate radio frequency energy and, if not installed and used in accordance with the instruction manual, may cause harmful interference to radio communications. Operation of this equipment in a residential area is likely to cause harmful interference in which case users will be required to correct the interference at their own expense.

**Notice**

Changes or modifications to this equipment not expressly approved by Ross Video Ltd. could void the user's authority to operate this equipment.

### *CANADA*

This Class "A" digital apparatus complies with Canadian ICES-003.

Cet appareil numerique de classe "A" est conforme à la norme NMB-003 du Canada.

### *EUROPE*

This equipment is in compliance with the essential requirements and other relevant provisions of **CE Directive 93/68/EEC**.

### *INTERNATIONAL*

This equipment has been tested to **CISPR 22:1997** along with amendments **A1:2000** and **A2:2002** and found to comply with the limits for a Class A Digital device.

**Notice**

This is a Class A product. In domestic environments this product may cause radio interference in which case the user may have to take adequate measures.

## Maintenance/User Serviceable Parts

Routine maintenance to this RossGear product is not required. This product contains no user serviceable parts. If the board does not appear to be working properly, please contact Technical Support using the numbers listed under the "Contact Us" section on the last page of this manual. All RossGear products are covered by a generous 5-year warranty and will be repaired without charge for materials or labor within this period. See the "Warranty and Repair Policy" section in this manual for details.

## Environmental Information

**The equipment that you purchased required the extraction and use of natural resources for its production. It may contain hazardous substances that could impact health and the environment.**

To avoid the potential release of those substances into the environment and to diminish the need for the extraction of natural resources, Ross Video encourages you to use the appropriate take-back systems. These systems will reuse or recycle most of the materials from your end-of-life equipment in an environmentally friendly and health conscious manner.

The crossed-out wheeled bin symbol invites you to use these systems.

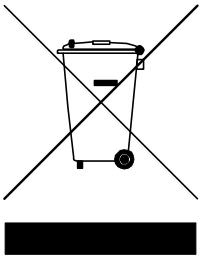

If you need more information on the collection, reuse, and recycling systems, please contact your local or regional waste administration.

You can also contact Ross Video for more information on the environmental performances of our products.

# Contents


## Introduction 1-1

In This Chapter ..... 1-1
- A Word of Thanks ..... 1-1
- Overview ..... 1-2
- Functional Block Diagram ..... 1-2
- Features ..... 1-3
- Documentation Terms ..... 1-3

## Installation and Setup 2-1

In This Chapter ..... 2-1
- Static Discharge ..... 2-1
- Unpacking ..... 2-1
- Board Installation ..... 2-2
- BNC Labels ..... 2-2
- Cable Connections ..... 2-2

## User Interface 3-1

In This Chapter ..... 3-1
- Jumper Locations ..... 3-2
- LEDs ..... 3-3

## SMPTE 269M Fault Reporting 4-1

In This Chapter ..... 4-1
- Overview ..... 4-1
- Jumper Setup ..... 4-2
- Frame Connections ..... 4-2
- Details ..... 4-2

## Specifications 5-1

In This Chapter ..... 5-1
- Technical Specifications ..... 5-1

## Service Information 6-1

In This Chapter ..... 6-1
- Troubleshooting Checklist ..... 6-1
- Warranty and Repair Policy ..... 6-2

## Ordering Information 7-1

In This Chapter ..... 7-1
- DSA-8004A and Related Products ..... 7-1

# Introduction

## In This Chapter

This chapter contains the following sections:

- A Word of Thanks
- Overview
- Functional Block Diagram
- Features
- Documentation Terms

### A Word of Thanks

Congratulations on choosing the Ross Video **DSA-8004A Dual Serial Equalizing Amplifier**. The **DSA-8004A** is part of a full line of Digital Products within the RossGear Terminal Equipment family of products, backed by Ross Video's experience in engineering and design expertise since 1974.

You will be pleased at how easily your new **DSA-8004A** fits into your overall working environment. Equally pleasing is the product quality, reliability and functionality. Thank you for joining the group of worldwide satisfied Ross Video customers!

Should you have a question pertaining to the installation or operation of your **DSA-8004A**, please contact us at the numbers listed on the back cover of this manual. Our technical support staff is always available for consultation, training, or service.

## Overview

The **DSA-8004A** Dual Serial Equalizing Amplifier is designed for general SDI distribution use. It suits applications where multiple outputs are required, but where reclocking is not required. It is a great rack-space saver because two amplifiers are contained on one DA card. Twenty amplifiers (ten cards) can be contained in a 2 RU frame. Because two amplifiers share one card, the cost per amplifier is the lowest possible. One amplifier has 4 outputs, the other amplifier has 3 outputs. The **DSA-8004A** operates on all serial digital standards, from 143Mb/s up to and including 360Mb/s.

Although the amplifier automatically equalizes up to 300m (1000 ft.) of Belden 1694A cable at 270Mb/s, 200m (656 ft.) is the recommended limit due to jitter considerations. Special measures have been taken to ensure excellent return loss on both input and outputs. This design guarantees error-free performance with short cable runs.

A very useful feature of the **DSA-8004A** is the card-edge LED status indicators, which confirm the presence of an input signal capable of equalization.

The **DSA-8004A** is designed to operate within the RossGear 8000-series digital products frame. Ten cards can be installed in a Ross 2 RU frame, and four amplifiers in a Ross 1 RU frame. This amplifier also fits Leitch* 6800-series frames.

## Functional Block Diagram

The following block diagram outlines the functions of the **DSA-8004A** card. Note that the BNC designations are noted in brackets after each SDI designation. Refer to the section, "**Cable Connections**" in this guide, for information on connecting cables to the **DSA-8004A** card.

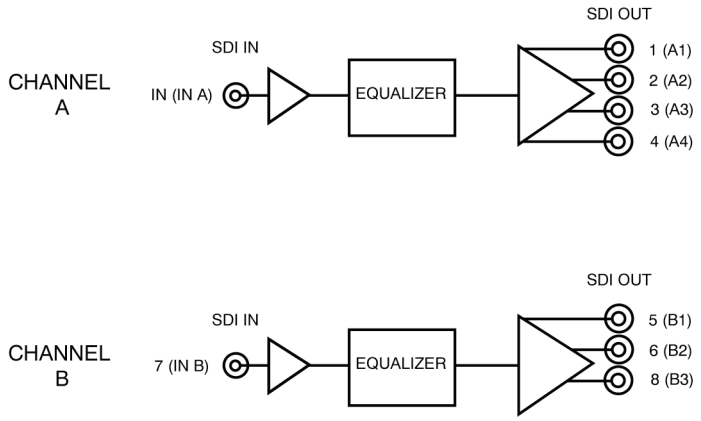


*Figure 1. Simplified Block Diagram of **DSA-8004A** Functions*

* Leitch is a trademark of Leitch Technology Corporation

## Features

The following features make the DSA-8004A the best solution for general SDI equalizing and distribution:

- Accommodates all SMPTE 259M compliant SDI signals
- Automatic cable equalization to 300m (1000 ft.)
- Input signal present indicator
- Output waveform reshaping
- 2 Serial Digital Amplifiers
- 7 Serial Digital Outputs
- Low cost
- Fits Ross 8000 Series and Leitch 6800 Series frame
- Fault Reporting (SMPTE 269M)
- 5-year transferable warranty

## Documentation Terms

The following terms are used throughout this guide:

- "**Frame**" refers to the **DFR-8104A** and **DFR-8110A** frames that house the **DSA-8004A** card.
- All references to the **DFR-8104A** and **DFR-8110A** also include the **DFR-8104A-C** and **DFR-8110A-C** versions with the cooling fan option. See the respective User Manuals for details.
- "**Operator**" and "**User**" both refer to the person who uses the **DSA-8004A**.
- "**Board**", "**Card**", and "**Module**" all refer to the **DSA-8004A** board itself, including all components and switches.
- "**System**" and "**Video system**" refers to the mix of interconnected production and terminal equipment in which the **DSA-8004A** operates.

# Installation and Setup

## In This Chapter

This chapter contains the following sections:

- Static Discharge
- Unpacking
- Board Installation
- BNC Labels
- Cable Connections

### Static Discharge

Whenever handling the DSA-8004A and other related equipment, please observe all static discharge precautions as described in the following note:

**ESD Susceptibility**

> Static discharge can cause serious damage to sensitive semiconductor devices. Avoid handling circuit boards in high static environments such as carpeted areas, and when wearing synthetic fiber clothing. Always exercise proper grounding precautions when working on circuit boards and related equipment.

### Unpacking

Unpack each DSA-8004A you received from the shipping container, and check the contents against the packing list to ensure that all items are included. If any items are missing or damaged, contact your sales representative or Ross Video directly.

## Board Installation

Use the following steps to install the DSA-8004A in a RossGear 8000 series digital distribution frame:

1. Refer to the User Manual of the RossGear 8000 series frame, to ensure that the frame is properly installed according to instructions. If this board is to be installed in any compatible frame other than a Ross Video product, refer to the frame manufacturer's manual for specific instructions.
2. Please note that heat and power distribution requirements within a frame may dictate specific slot placement of cards. Cards with many heat-producing components should be arranged to avoid areas of excess heat build-up, particularly in frames using convectional cooling.
3. After selecting the desired frame installation slot, hold the DSA-8004A card by the edges and carefully align the card edges with the slots in the frame. Then fully insert the card into the frame until the rear connection plug is properly seated.

## BNC Labels

Affix the supplied BNC label, as per the included instructions, to the BNC area on the rear of the rack frame.

## Cable Connections

This section provides instructions for connecting cables to the DSA-8004A when mounted in RossGear 8000 series Digital Products Frames. The cable connectors on the rear of the frame are marked for distribution amplifiers having one input and eight outputs.

Connect the input and output cables according to the frame rear panel connections diagram in the following figures. The inputs are internally terminated in 75 ohms. It is not necessary to terminate unused outputs.

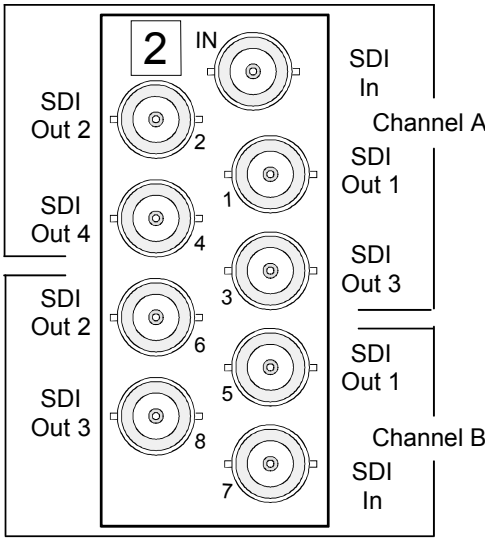


*Figure 2. BNC Designations for RossGear DFR-8110A (2RU Frame)*

# User Interface

## In This Chapter

This chapter contains the following sections:

- Jumper Locations
- Output Mute
- LEDs

## Jumper Locations

The following section describes the user configurable jumpers on the **DSA-8004A**.

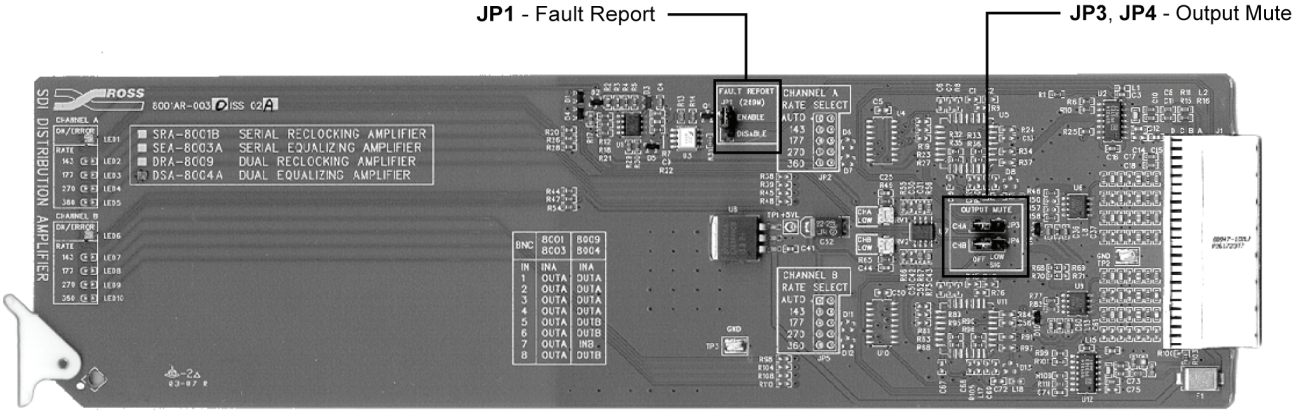


*Figure 3. Jumper Locations*

### *Fault Report – JP1*

Select SMPTE 269M Fault Reporting, **ENABLE** or **DISABLE**, via **JP1**. The default is **ENABLE**.

Refer to the Chapter "**SMPTE 269M Fault Reporting**" for complete details.

### *Output Mute – JP3 and JP4*

There is an Output Mute jumper for each Channel – **JP3** is for Channel A, and **JP4** is for Channel B.

Select one of the following options as follows, to enable or disable the **Output Mute** option for a channel:

- **LOW SIG** — output will be muted if the input signal degrades to the point that the input EQ can no longer guarantee error-free performance. When the OK / ERROR LED is Red for that Channel, the outputs will be muted.
- **Off** — the card will work to the limits of the input stage. This is the default setting.

## LEDs

The front edge of the board has LED indicators which show the status of the amplifier. They are described in the following figure and tables.

The board is operating correctly when the Input OK LED is lit.

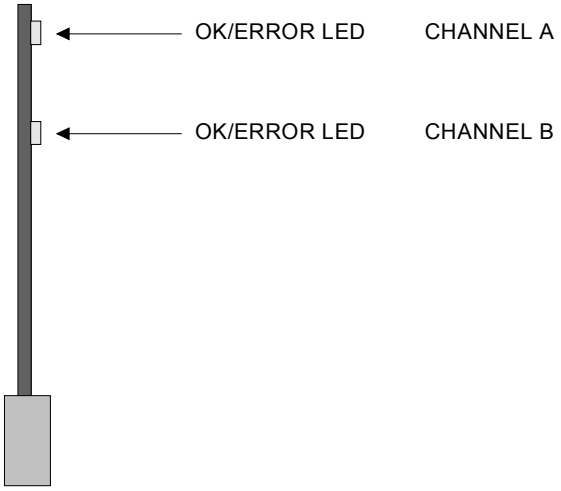


*Figure 4. Card-edge LEDs*

### *Channel A LED*

The following table describes the LED indicators for Channel A located on the front edge of the card.

*Table 1. Channel A LED Status Indicator Descriptions*

| LED | Reference | Status Description |
|---|---|---|
| OK / ERROR (Green / Red) | Input OK / Error | When green, Channel A of the card is operating correctly. This indicates that the input signal is suitable for achieving error-free performance, and is within the capability of the cable equalizer to restore the signal.<br>When red, the input signal is too low or absent. In some circumstances, the signal may still be restored correctly but the circuits will be working close to the limit of their capability, and reliability cannot be assured. |

### *Channel B LED*

The following table describes the LED indicators for Channel B located on the front edge of the card.

*Table 2. Channel B LED Status Indicator Descriptions*

| LED | Reference | Status Description |
|---|---|---|
| OK / ERROR (Green / Red) | Input OK / Error | When green, Channel B of the card is operating correctly. This indicates that the input signal is suitable for achieving error-free performance, and is within the capability of the cable equalizer to restore the signal.<br>When red, the input signal is too low or absent. In some circumstances, the signal may still be restored correctly but the circuits will be working close to the limit of their capability, and reliability cannot be assured. |

# SMPTE 269M Fault Reporting

## In This Chapter

This chapter contains the following sections:

- Overview
- Jumper Setup
- Frame Connections
- Details

### Overview

The SMPTE 269M Fault Reporting system, also known as a SMPTE "alarm", provides indication if one or more frame boards encounter a fault or an abnormal condition. The DSA-8004A board provides a jumper to enable SMPTE-269M fault reporting. The card connects by means of an internal interface circuit to an auxiliary Telco connector on RossGear 8000 series frames. When the frame connection is interfaced with a customer-designed system of LEDs or audible alarms, faults can be traced to a specific frame when a card fault occurs within that frame.

The following diagram illustrates a general arrangement for SMPTE 269M alarm reporting:

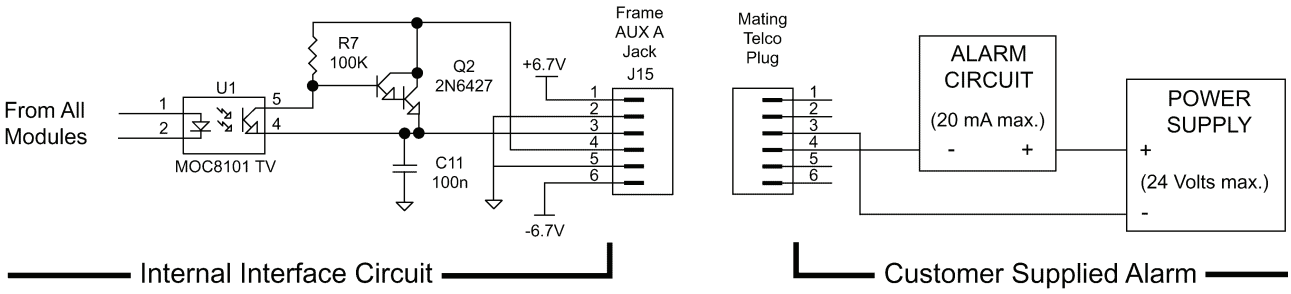


*Figure 5. SMPTE 269M Alarm Reporting: Internal interface and typical connections*

## Jumper Setup

If fault reporting for the DSA-8004A is desired, use jumper **JP1 - FAULT REPORT** to set up the card.

1. To access the jumper, remove the card from the frame by pressing down the white card ejector tab and pulling the card from the frame slot.
2. Observing all static discharge and handling precautions, place the card with the component side facing up on a clean flat surface.
3. To enable SMPTE fault reporting, set jumper **JP1** to **ENABLE** position. The default is **ENABLE**.
4. To disable SMPTE fault reporting, set jumper **JP1** to **DISABLE** position.

## Frame Connections

The SMPTE 269M Fault Reporting connection on RossGear 8000 series frames is provided by the auxiliary Telco connector, **AUX A**, for interfacing with a customer-designed alarm system.

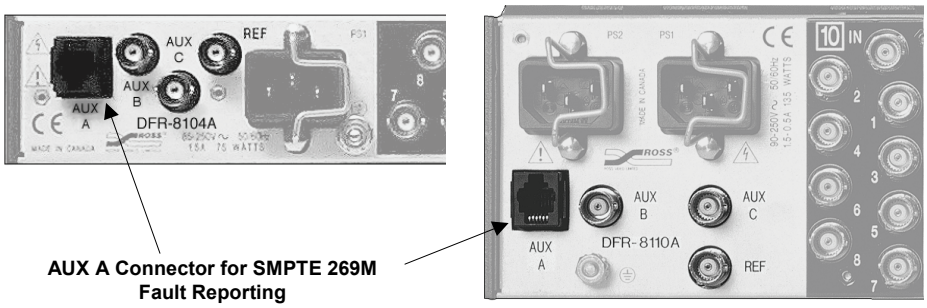


*Figure 6. SMPTE 269M Alarm Reporting Frame Connections*

## Details

The fault report contacts are closed when the card detects an internal failure or a power loss condition. The fault report will pulse off for 1 to 2 ms about every 16ms if the input signal is low or missing.

Some internal failures are:

- Failure of the card to initialize
- Failure in the fault reporting circuitry
- Failure to detect a valid input signal to the card

For additional information on alarm system design, refer to the SMPTE document ***ANSI/SMPTE 269M - 1999***.

# Specifications

## In This Chapter

This chapter contains the Technical Specifications table.

### Technical Specifications

*Table 3. Technical Specifications*

| Category | Parameter | Specification |
|---|---|---|
| SDI Input | Number Of Inputs | 2 |
| | Standards | SMPTE 259M |
| | Input Impedance | 75Ω Terminating |
| | Return Loss | >20 dB to 360 MHz |
| | Equalization | Automatic up to 300m of Belden 1694A@ 270Mb/s) * |
| SDI Outputs | Number of Outputs | 7 total: 4 on Amp 1, 3 on Amp 2 |
| | Output Impedance | 75Ω |
| | Return Loss | >18dB to 360 MHz |
| | Signal Level | 800mV +/- 10% |
| | DC Offset | 0 Volts +/- 50 mV |
| | Rise and Fall Time (20 - 80%) | 750ps Typical |
| | Overshoot | >8% |
| | Delay (SDI Input to SDI Output) | >5ns |
| Power | Total Power Consumption | 1.6W |

* We recommend 200m or less of input cable due to jitter considerations.

Specifications are subject to change without notification.

# Service Information

## In This Chapter

This chapter contains the following sections:

- Troubleshooting Checklist
- Warranty and Repair Policy

### Troubleshooting Checklist

Routine maintenance to this RossGear product is not required. In the event of problems with your **DSA-8004A**, the following basic troubleshooting checklist may help identify the source of the problem. If the board still does not appear to be working properly after checking all possible causes, please contact your Ross Video products distributor, or the Ross Video Technical Support department at the numbers listed under the "Contact Us" section at the end of this manual.

1. **Visual Review –** Performing a quick visual check may reveal many problems, such as connectors not properly seated or loose cables. Check the board, the frame, and any associated peripheral equipment for signs of trouble.
2. **Power Check –** Check the power indicator LED on the distribution frame front panel for the presence of power. If the power LED is not illuminated, verify that the power cable is connected to a power source and that power is available at the power main. Confirm that the power supplies are fully seated in their slots. If the power LED is still not illuminated, replace the power supply with one that is verified to work.
3. **Reseat the Card in the Frame** – Eject the card and reinsert it in the frame.
4. **Check Control Settings –** Refer to the Installation and Operation sections of the manual and verify all user-adjustable component settings.
5. **Input Signal Status –** Verify that source equipment is operating correctly and that a valid signal is being supplied.
6. **Output Signal Path –** Verify that destination equipment is operating correctly and receiving a valid signal.
7. **Board Exchange** – Exchanging a suspect board with a board that is known to be working correctly is an efficient method for localizing problems to individual boards.

## Warranty and Repair Policy

The RossGear **DSA-8004A** is warranted to be free of any defect with respect to performance, quality, reliability, and workmanship for a period of FIVE (5) years from the date of shipment from our factory. In the event that your RossGear **DSA-8004A** proves to be defective in any way during this warranty period, Ross Video Limited reserves the right to repair or replace this piece of equipment with a unit of equal or superior performance characteristics.

Should you find that this RossGear **DSA-8004A** has failed after your warranty period has expired, we will repair your defective product should suitable replacement components be available. You, the owner, will bear any labor and/or part costs incurred in the repair or refurbishment of said equipment beyond the FIVE (5) year warranty period.

In no event shall Ross Video Limited be liable for direct, indirect, special, incidental, or consequential damages (including loss of profits) incurred by the use of this product. Implied warranties are expressly limited to the duration of this warranty.

This RossGear **DSA-8004A** User Manual provides all pertinent information for the safe installation and operation of your RossGear Product. Ross Video policy dictates that all repairs to the RossGear **DSA-8004A** are to be conducted only by an authorized Ross Video Limited factory representative. Therefore, any unauthorized attempt to repair this product, by anyone other than an authorized Ross Video Limited factory representative, will automatically void the warranty. Please contact Ross Video Technical Support for more information.

### *In Case of Problems*

Should any problem arise with your RossGear DSA-8004A, please contact the Ross Video Technical Support Department. (Contact information is supplied at the end of this publication.)

A Return Material Authorization number (RMA) will be issued to you, as well as specific shipping instructions, should you wish our factory to repair your RossGear DSA-8004A. If required, a temporary replacement board will be made available at a nominal charge. Any shipping costs incurred will be the responsibility of you, the customer. All products shipped to you from Ross Video Limited will be shipped collect.

The Ross Video Technical Support Department will continue to provide advice on any product manufactured by Ross Video Limited, beyond the warranty period without charge, for the life of the equipment.

# Ordering Information

## In This Chapter

This chapter contains ordering information for the DSA-8004A and related products.

### DSA-8004A and Related Products

#### *Standard Equipment*

- **DSA-8004A** Dual Serial Equalizing Amplifier
- **8004ADR-004** Dual Serial Equalizing Amplifier User Manual

#### *Optional Equipment*

- **8004ADR-004** Dual Serial Equalizing Amplifier User Manual (additional User Manual)
- **DFR-8104A** Digital Products Frame and Power Supply (PS-8102) (1RU, holds 4 boards, includes 1 power supply)
- **DFR-8104A-C** Digital Products Frame with Cooling Fan Board and Power Supply (PS-8102) (1RU, holds 4 boards, includes 1 power supply)
- **DFR-8110A** Digital Products Frame and Power Supply (PS-8102) (2RU, holds 10 boards, includes 1 power supply)
- **DFR-8110A-C** Digital Products Frame with Cooling Fan Board and Power Supply (PS-8102) (2RU, holds 10 boards, includes 1 power supply)

Your **DSA-8004A Dual Serial Equalizing Amplifier** is a part of the RossGear family of products. Ross Video offers a full line of RossGear terminal equipment including distribution, conversion, monitoring, synchronizers, encoders, decoders, keyers, switchers, as well as analog audio and video products.

***Notes:***

***Notes:***

# Contact Us

**Contact our friendly and professional support representatives for the following:**

- Name and address of your local dealer
- Product information and pricing
- Technical support
- Upcoming trade show information

| | | |
|---|---|---|
| **PHONE** | **General Business Office and Technical Support** | 613 • 652 • 4886 |
| | **After-hours Emergency** | 613 • 349 • 0006 |
| | **Fax** | 613 • 652 • 4425 |
| **E-MAIL** | **General Information** | solutions@rossvideo.com |
| | **Technical Support** | techsupport@rossvideo.com |
| **POSTAL SERVICE** | **Ross Video Limited** | 8 John Street,<br>Iroquois, Ontario, Canada<br>K0E 1K0 |
| | **Ross Video Incorporated** | P.O. Box 880,<br>Ogdensburg, New York, USA<br>13669-0880 |

# Visit Us

**Please visit us at our website for:**

- Company information
- Related products and full product lines
- On-line catalog
- Trade show information
- News
- Testimonials

www.rossvideo.com