CARBONITE BLACK

Caution: Before you set up and operate your switcher, see the "Important Safety Instructions" in your User manual.

QuickStart

Panel Ports and Connectors

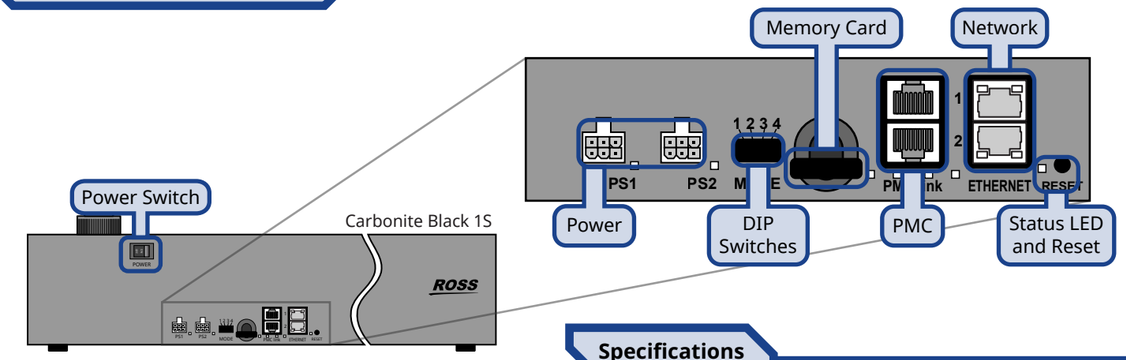

Notes:

- The ethernet 2 port is not available at this time.

Specifications

Input Voltages	
All	100 - 120V~ 220 - 240V~ 47-63Hz

Max Power Consumption			
CB9	24W	2.0A	12V
CB1	25W	2.1A	12V
CB1S	30W	2.5A	12V
CB2	35W	2.9A	12V
CB2S	45W	3.8A	12V
CB3S	65W	5.4A	12V
CB3X	80W	6.7A	12V

DashBoard Display Ports and Connectors

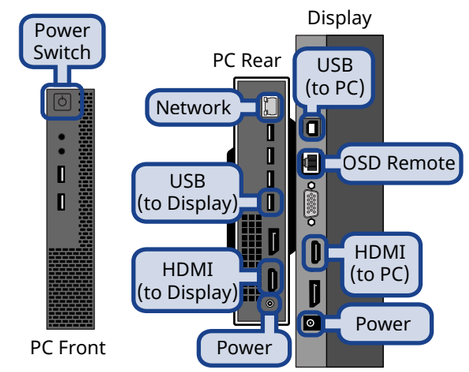

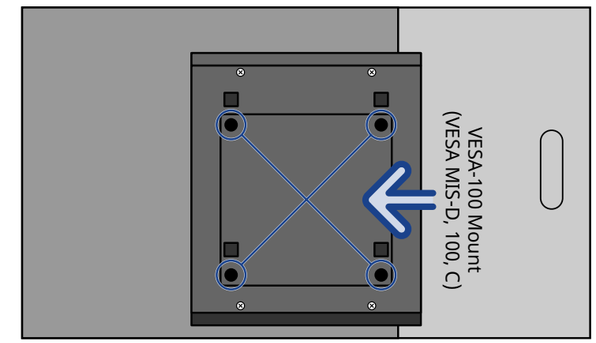

Desk Mounting

Note: The Desk Mounting option is required to properly secure the panel to a desk.

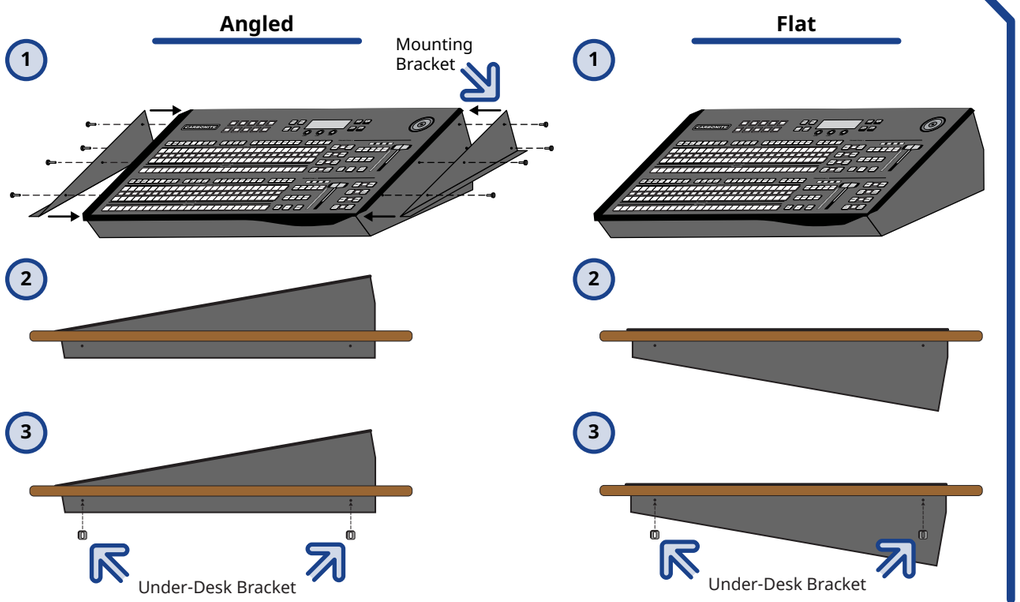

Cabling

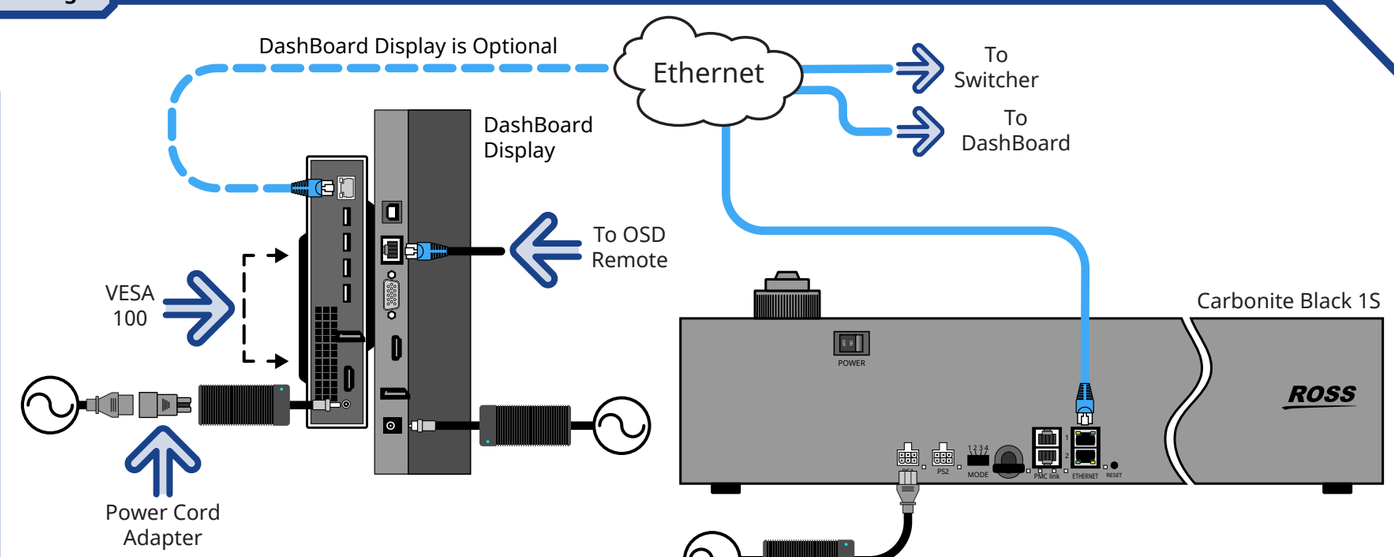

Mains Power

Note: It is recommended that you always connect the AC Power Adapter to the device before connecting to Mains Power.

Having a problem? Call our free, 24-hour technical support hotline to speak with a live product specialist located right here in our facility.

Tel: (+1) 613 • 652 • 4886
Email: techsupport@rossvideo.com

ROSS

© 2024 Ross Video Limited. Ross®, MiniME™, TouchDrive™ and any related marks are trademarks or registered trademarks of Ross Video Limited. All other trademarks are the property of their respective companies. PATENTS ISSUED and PENDING. All rights reserved. No part of this publication may be reproduced, stored in a retrieval system, or transmitted in any form or by any means, mechanical, photocopying, recording or otherwise, without the prior written permission of Ross Video. While every precaution has been taken in the preparation of this document, Ross Video assumes no responsibility for errors or omissions. Neither is any liability assumed for damages resulting from the use of the information contained herein.

4880DR-201-01 Rev.02