Furio SE Dolly Maintenance – Replacing the Drive Wheel Unit

Start Here — Before You Begin

1 About This Document

Each Furio SE dolly has one drive wheel unit and three passive wheel units. This document describes how to remove and replace the drive wheel unit (using kit ***FRO-SP-WHDRV-U***). For information about replacing all four wheel units (using kit ***FRO-SP-WHKIT-U***), see ***Replacing All Furio SE Wheel Units (5100DR-078-xx)***.

Required Tools and Materials

In addition to the kit contents, the following tools and materials are required:

- One 17 mm open-end wrench
- Prop support (prop blocks or a small jack) to lift the end of the dolly to a height of 4" (10 cm) higher than the top of the rails. (see diagram).
  IMPORTANT: Do not stack prop blocks on top of the rails. Use prop blocks only between the two rails of the track. Placing anything except dolly wheels on the rails may damage them.

Prepare the Dolly

a) Move the dolly close to the end of the track where its wiredraw unit is located.

b) Lower the lift completely and then disconnect the dolly power cable.

c) Using a 5 mm hex key, detach the wiredraw cable from the wiredraw post on the dolly and then gently guide the wiredraw cable into the wiredraw unit. See diagram.

IMPORTANT: Handle the wiredraw cable with care to avoid permanently damaging the cable and the wiredraw unit:

- Grasp the cable end tightly, but do not wrap it around your hand or bend it.
- **NEVER** allow the cable to snap back into the wiredraw unit. If you release the cable and it snaps back into the wiredraw unit, the unit may be irreparably damaged.
- Hold the cable close to the floor and parallel to the track. This reduces any rubbing of the steel cable against the wiredraw enclosure box, thus protecting the cable from damage.

Removing Stability Wheels

2 About Stability Wheels

Two of the three passive wheel units have anti-tip stability wheels that hug the track if the dolly starts to lean due to excessive speed in a turn.

Both sets of stability wheels (4 wheels total) must be removed before you can remove the drive wheel unit from the dolly. This is because removing the drive wheel unit requires you to lift one end of the dolly, which is a type of motion the stability wheels are designed to prevent.

Remove Stability Wheels

a) For each stability wheel, remove the locking pin by pressing and holding the pin lock button while sliding the locking pin out, and then remove the stability wheel. See diagram.

Passive Wheel Unit (end view)

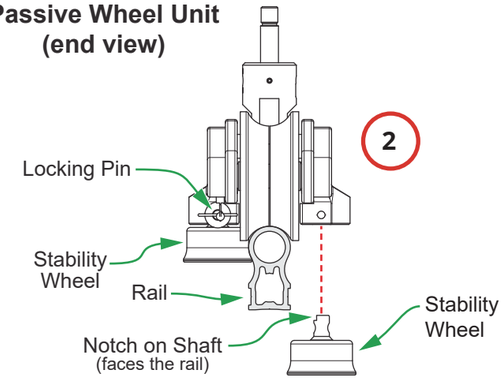

Furio SE Dolly - Showing Drive Wheel Unit and one Passive Wheel Unit

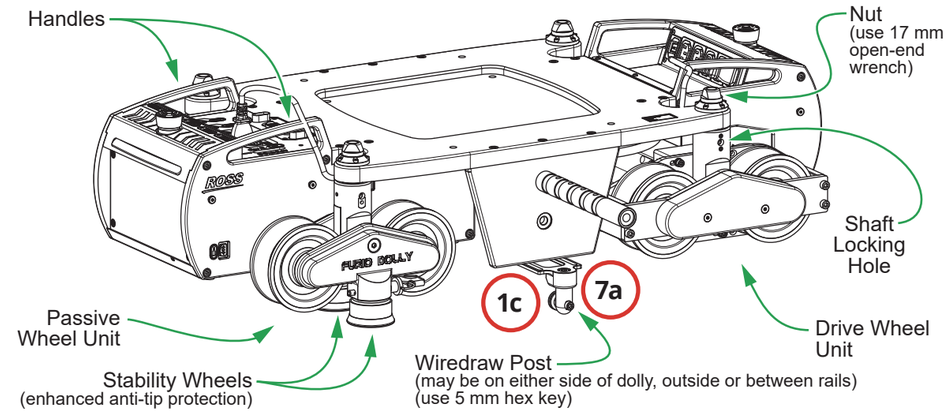

Furio SE Dolly

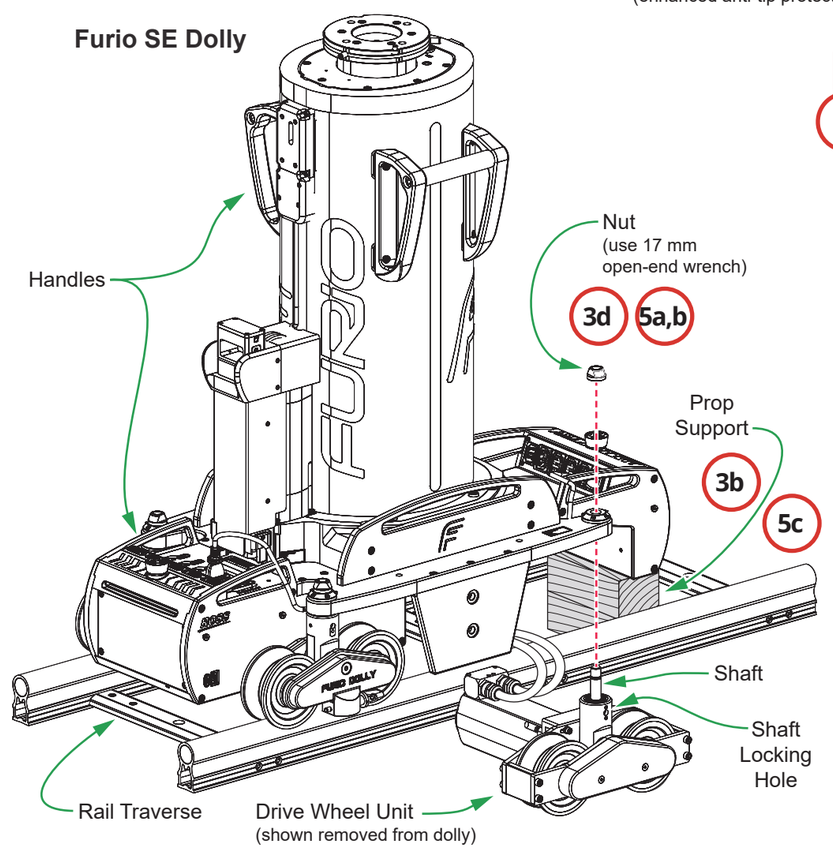

Removing the Drive Wheel Unit

3 Remove the Drive Wheel Unit

a) Move the dolly to a location on the track where there is ample working space. Ensure that the end with the drive wheel unit is between rail traverses (cross pieces), so nothing is between the end of the dolly and the floor.

b) Prepare the prop support so it's ready to suspend the end of the dolly at a height of 4" (10 cm) above the top of the rails.

c) Have two people lift and hold up the end of the dolly while another person positions the prop support beneath it.

IMPORTANT: Lift only by handles on the dolly and lift. Never lift the payload or the top section of the lift! Improper lifting may damage the payload and/or dolly!

IMPORTANT: The dolly is heavy. Get help, and follow workplace safety rules. Be careful not to tip or drop the dolly.

IMPORTANT: Ensure that the dolly rests in a stable position. Do not allow the dolly to roll away or slip off the prop support.

d) Use a 17 mm open-end wrench to remove the nut above the drive wheel unit. See diagram.

Tip: If the nut spins without coming off, insert a narrow tool into the locking hole in the side of the shaft as you turn the wrench. The tool engages with the shaft and locks it, enabling you to remove the nut.

e) Lower the drive wheel unit until its shaft is free from the dolly, and then set the drive wheel unit down.

IMPORTANT: Do not attempt to disconnect the motor cables between the drive wheel unit or the dolly! Do not pull the cables taut! Damage to the cables may result.

5100DR-076-01

© 2022 Ross Video Limited. All rights reserved. Ross® and any related marks are trademarks or registered trademarks of Ross Video Limited. All other trademarks are the property of their respective companies. PATENTS ISSUED and PENDING. All rights reserved. No part of this publication may be reproduced, stored in a retrieval system, or transmitted in any form or by any means, mechanical, photocopying, recording, or otherwise, without the prior written permission of Ross Video. While every precaution has been taken in the preparation of this document, Ross Video assumes no responsibility for errors or omissions. Neither is any liability assumed for damages resulting from the use of the information contained herein. Printed in Canada.

Transferring the Motor Unit

4 Transfer the Motor Unit

The replacement drive wheel unit does not include a motor unit. You must transfer the motor unit to the new drive wheel unit.

a) Use the 4 mm hex key to remove the four screws that attach the motor unit to the drive wheel unit. See diagram.

Tip: Each screw has a flat washer and a lock washer. Do not lose the washers.

b) Detach the drive wheel unit and the drive belt from the motor unit. Discard the drive belt. You will replace it with a new one.

c) On the new drive wheel unit, place the new drive belt over the large pulley, ensuring the belt is centered on the pulley.

d) Align the motor unit to the new drive wheel unit, placing the drive belt over the motor pulley. Ensure the belt is centered on the motor pulley and that the motor unit is oriented as shown.

e) Have one person slide the motor unit away from the large pulley, to apply firm tension to the belt, while another person inserts and tightens the four screws you removed in **step 4a**.

Tip: Each screw has a flat washer and a lock washer. Position the lock washer between the screw head and the flat washer.

f) Turn the wheels a few times and observe the drive belt, to ensure that it remains centered on the pulleys.

Reinstalling the Drive Wheel Unit

5 Reinstall the Drive Wheel Unit

a) Reattach the drive wheel unit by sliding its shaft through the hole in the dolly base, and then loosely attaching the nut. See diagram labeled, "**Furio SE Dolly**" on **page 1**.

b) Use the 17 mm open-end wrench to tighten the nut at the top of the shaft.

Tip: Insert a narrow tool into the locking hole in the side of the shaft as you turn the wrench. The tool engages with the shaft and locks it, enabling you to tighten the nut.

c) Have two people lift the end of the dolly, while another removes the prop support.

IMPORTANT: Lift only by handles on the dolly and lift. Never lift the payload or the top section of the lift! Improper lifting may damage the payload and/or dolly!

IMPORTANT: The dolly is heavy. Get help, and follow workplace safety rules. Be careful not to tip or drop the dolly.

d) Gently lower the dolly onto the track, ensuring that all wheels are properly seated on the track.

Drive Wheel Unit - Detaching from the Motor Unit

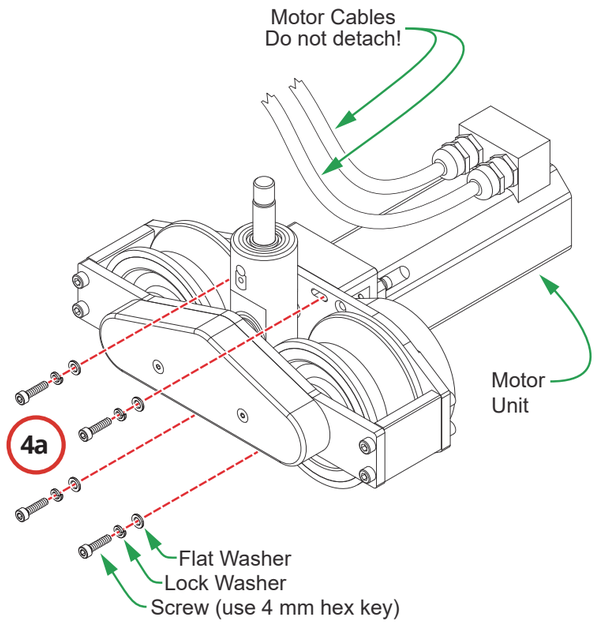

Drive Wheel Unit - Replacing Belt

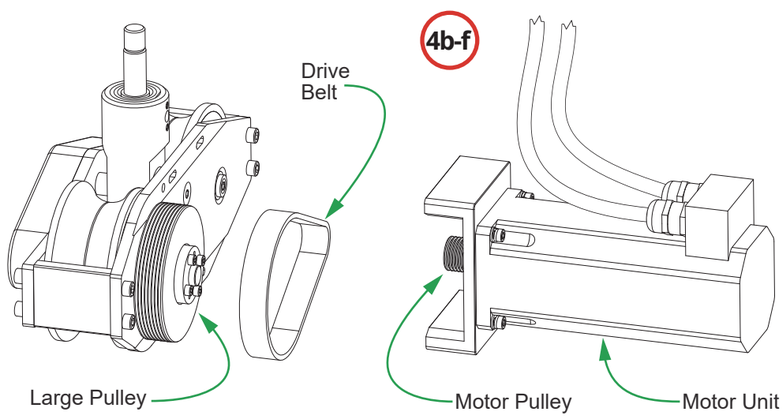

Passive Wheel Unit - End View

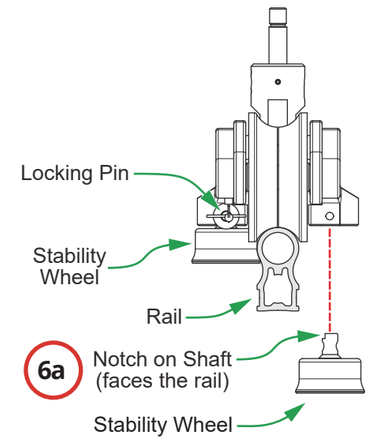

Passive Wheel Unit - Side View

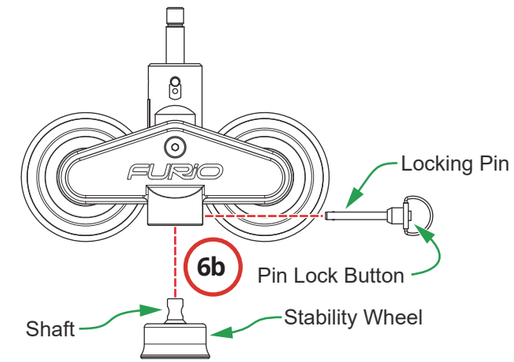

Reinstalling Stability Wheels

6 About Stability Wheels

Two of the three passive wheel units each have a pair of stability wheels (4 total). These two wheel units are installed on diagonally opposite corners of the dolly.

Reinstall Stability Wheels

a) Rotate the stability wheel shaft so the notch on the shaft faces the rail. See diagram.

b) Insert the shaft of the stability wheel into its hole, then press and hold the pin lock button while sliding the locking pin into its hole. See diagram.

c) Repeat **steps 6a to 6c** until all four stability wheels have been installed.

Reattaching the Wiredraw Cable and Restoring Power

7 Reattach the Wiredraw Cable and Restore Power

a) Gently pull the wiredraw cable out from the wiredraw unit and then attach it to the wiredraw post on the dolly, using a 5 mm hex key. See diagram on **page 1**.

IMPORTANT: Handle the wiredraw cable with care to avoid permanently damaging the cable and wiredraw unit:

- Grasp the cable end tightly, but do not wrap it around your hand or bend it.
- **NEVER** allow the cable to snap back into the wiredraw unit. If you release the cable and it snaps back into the wiredraw unit, the unit may be irreparably damaged.
- Hold the cable close to the floor and parallel to the track. This reduces any rubbing of the steel cable against the wiredraw enclosure box, thus protecting the cable from damage.

b) When you have finished servicing the dolly, reconnect its power cable.

Need Help? Our friendly, knowledgeable Ross Video Technical Support staff are always available!
- by e-mail: techsupport@rossvideo.com
- by telephone +1 613-652-4886 or +1 613-349-0006 (after hours emergency)
- by telephone toll-free in North America: 1-844-652-0645 or Internationally: +800 1005 0100
- online through our website: www.rossvideo.com