FED-6943 GigE

Dual Link Ethernet Fiber Transceiver (WDM)

7 Port, Gigabit Ethernet switch with dual link, bi-directional fiber transceiver.

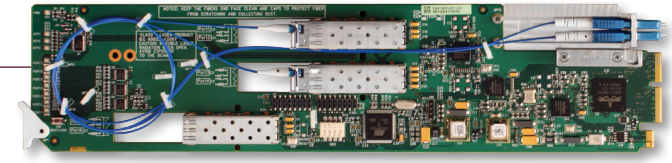

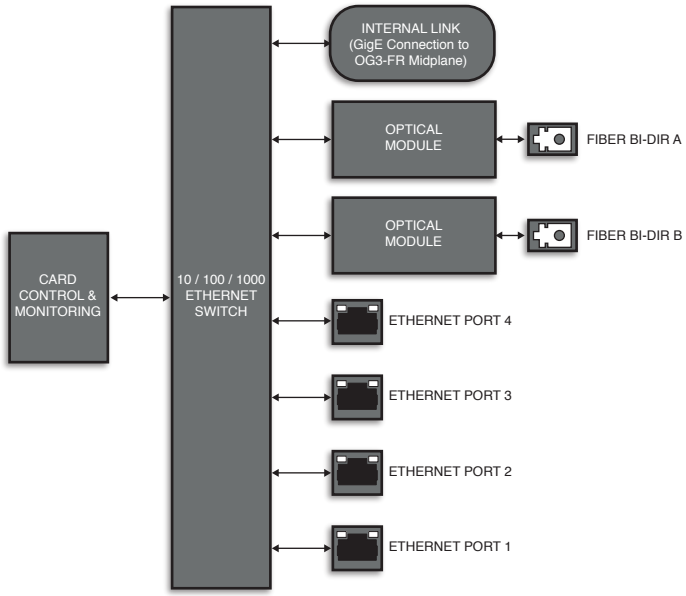

The FED-6943 is a dedicated 7 port, Gigabit Ethernet switch. 4 Copper ports provide 1Gb/s connectivity for multiple Ethernet enabled devices or links to additional network switches. 2 optical ports provide Ethernet links over two, bi-directional fiber connections for extended distances. An additional port is available for the OG3 frame's optional internal GigE controller.

The FED-6943 is available in 2 varieties: The FED-6943-20A/B transceiver pair is capable of running up to a 20km link between 2 transceivers. The FED-6943-40A/B transceiver pair is capable of running up to 40km link, by using a higher output power and higher receiver sensitivity SFP.

Using WDM (Wave Division Multiplexing), a bi-directional link can be obtained using 1310nm and 1550nm wavelengths over a single fiber link. When using WDM single fiber link, the two FED-6943 transceivers at each end of the link must complement each other in regards to their wavelength TX and RX.

Key Features

- 4 independent copper Gigabit Ethernet ports
- Copper Ethernet connection: RJ45
- 2 bi-directional single fiber WDM connection
- Optical connection: LC
- Internal GigE midplane connection
- SNMP compliant
- 5-year transferable warranty

Input Optical Sensitivity & Wavelength

- 20km A: -22dBm @ 1550nm
- 20km B: -23dBm @ 1310nm
- 40km A: -23dBm @ 1550nm
- 40km B: -23dBm @ 1310nm

Output Power & Wavelength

- 20km A: -8dBm @ 1310nm
- 20km B: -8dBm @ 1550nm
- 40km A: -3dBm @ 1310nm
- 40km B: -5dBm @ 1550nm

Ordering Information

Dual Link Ethernet Transceiver, Dual Fiber

FED-6943-20A	20km WDM 1310 TX / 1550 RX
FED-6943-20B	20km WDM 1550 TX / 1310 RX
FED-6943-40A	40km WDM 1310 TX / 1550 RX
FED-6943-40B	40km WDM 1550 TX / 1310 RX

Rear Module Suffix (ex: [model]-R2)
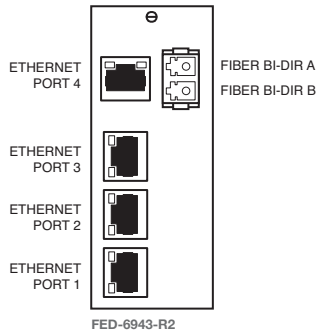
-R2	Rear Module for FED-6943